DC Fans

Gryphon by Comair Rotron

:: 40 x 40 x 28 mm

:: Pressure (P) vs. Flow (Q) Curves

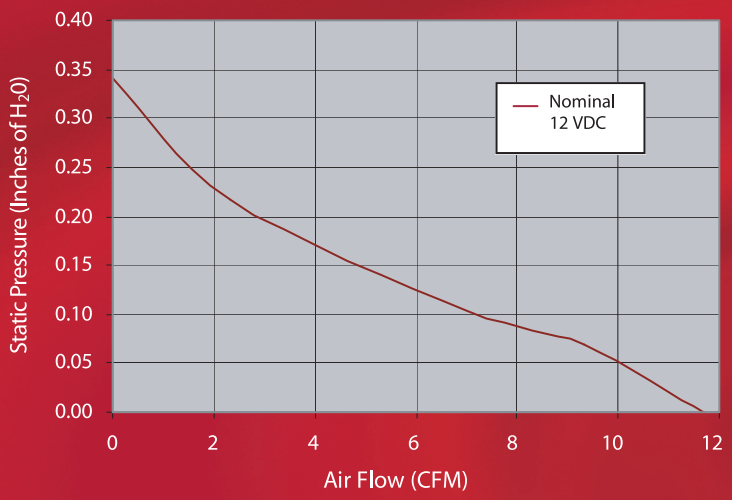

Standard Features

- Size: (L x W x H), 1.57" x 1.57" x 1.10" (40 mm x 40mm x 28mm)
- Airflow: 19.14m³/hour (11.26 CFM)
- Noise Level: 31.44 dBA, as measured in free air and with the microphone 1 meter from the air intake side of the fan
- Nominal Operating Voltage: 12 VDC
- Operating Temperature: -10° C to +70° C
- Storage Temperature: -40° C to +80° C
- Weight: 36.0 g (0.08 lbs)
- The motor is impedance protected to prevent burn-out if obstructed
- Termination: 240mm (9.44") Leadwires; 26 AWG, UL 1007; Red - Positive; Black - Negative; White - tachometer
- Impeller: Black, UL94-VO rated thermoplastic
- Housing: Black, UL94-VO rated thermoplastic
- Airflow Direction: Intake over the fan struts

Benefits

- High performance, low cost fan minimising design and inventory costs
- Integral Open Collector tachometer wire supplied as standard, for optional use, eliminating the need for a custom alternative fan
- Two ball bearing systems per fan, providing high lifetime reliability

:: 40 x 40 x 28 mm

:: Product **table**

Part No.	Rated Voltage VDC	Operating Voltage Range VDC	Rated Current Amps	Rated Input Power Watts	Speed RPM	Maximum Airflow m³/hour	Maximum Airflow CFM	Maximum Air Pressure mm H²O	Maximum Air Pressure in H²o	Noise dBa	Tach
GDA4028-12BB	12	6.0 - 13.8	0.2	2.4	8800	19.14	11.26	8.67	0.34	31.44	Yes

RoHS 2002/95/EC · cULus · TUV Rheinland · CE

* The maximum airflow and speed are measured in free air, at an ambient temperature of 25°c.
* The maximum air pressure is measured with zero airflow, at an ambient temperature of 25°c.
* The fan noise is measured in a semi-anechoic chamber, where the background noise is below 18 dBA (+/-1 dBA)
* All readings are typical values at the rated voltage.
* Specifications are subject to change without notice.
* For more detailed specifications or other requests, please contact Comair Rotron Technical Support.

rev 4/05
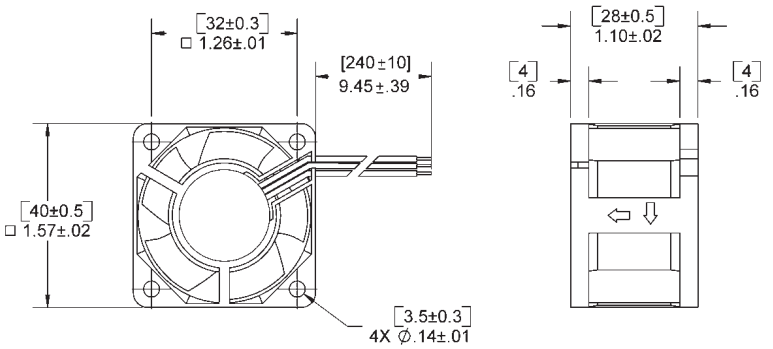
:: Mechanical **Drawing**