DATA SHEET

80C575/83C575/87C575
CMOS single-chip 8-bit microcontrollers

Product specification

1996 Aug 16

IC20 Data Handbook

Philips
Semiconductors

PHILIPS

DESCRIPTION

The Philips 80C575/83C575/87C575 is a high-performance microcontroller fabricated with Philips high-density CMOS technology. The Philips CMOS technology combines the high speed and density characteristics of HMOS with the low power attributes of CMOS. Philips epitaxial substrate minimizes latch-up sensitivity.

The 8XC575 contains an 8k × 8 ROM (83C575) EPROM (87C575), a 256 × 8 RAM, 32 I/O lines, three 16-bit counter/timers, a Programmable Counter Array (PCA), a seven-source, two-priority level nested interrupt structure, an enhanced UART, four analog comparators, power-fail detect and oscillator fail detect circuits, and on-chip oscillator and clock circuits.

In addition, the 8XC575 has a low active reset, and the port pins are reset to a low level. There is also a fully configurable watchdog timer, and internal power on clear circuit. The part includes idle mode and power-down mode states for reduced power consumption.

FEATURES

- 80C51 based architecture
  - 8k × 8 ROM (83C575)
  - 8k × 8 EPROM (87C575)
  - ROMless (80C575)
  - 256 × 8 RAM
  - Three 16-bit counter/timers
  - Programmable Counter Array
  - Enhanced UART
  - Boolean processor
  - Oscillator fail detect
  - Low active reset
  - Asynchronous low port reset
  - Schmitt trigger inputs
  - 4 analog comparators
  - Watchdog timer
  - Low V_{CC} detect
- Memory addressing capability
  - 64k ROM and 64k RAM
- Power control modes:
  - Idle mode
  - Power-down mode
- CMOS and TTL compatible
- 4.0 to 16MHz
- Extended temperature ranges
- OTP package available

PIN CONFIGURATIONS

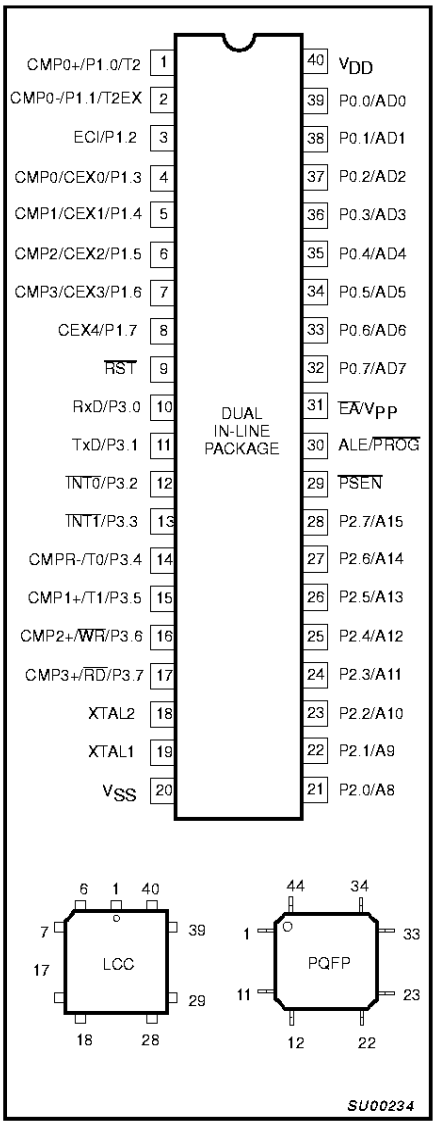

ORDERING INFORMATION

ROMless	ROM	EPROM[1]		TEMPERATURE RANGE °C AND PACKAGE	FREQ (MHz)	DRAWING NUMBER
P80C575EBPN	P83C575EBPN	P87C575EBPN	OTP	0 to +70, 40-Pin Plastic Dual In-line Package	16	SOT129-1
P80C575EBAA	P83C575EBAA	P87C575EBAA	OTP	0 to +70, 44-Pin Plastic Leaded Chip Carrier	16	SOT187-2
		P87C575EBFFA	UV	0 to +70, 40-Pin Ceramic Dual In-line Package	16	0590B
		P87C575EBLKA	UV	0 to +70, 44-Pin Ceramic Leaded Chip Carrier	16	1472A
P80C575EHPN	P83C575EHPN	P87C575EHPN	OTP	–40 to +125, 40-Pin Plastic Dual In-line Package	16	SOT129-1
P80C575EHAA	P83C575EHAA	P87C575EHAA	OTP	–40 to +125, 44-Pin Plastic Leaded Chip Carrier	16	SOT187-2
		P87C575EHFFA	UV	–40 to +125, 40-Pin Ceramic Dual In-line Package	16	0590B
P80C575EBBB	P83C575EBBB	P87C575EBBB	OTP	0 to +70, 44-Pin Plastic Quad Flat Pack	16	SOT307-2

NOTE:
1. OTP - One Time Programmable EPROM. UV - Erasable EPROM

CERAMIC AND PLASTIC LEADED CHIP CARRIER PIN FUNCTIONS

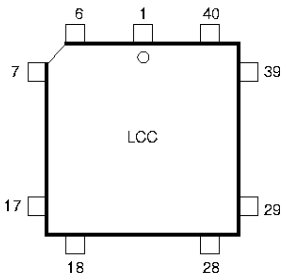

Pin	Function	Pin	Function
1	NC*	23	NC*
2	T2/P1.0/CMP0+	24	P2.0/A8
3	T2EX/P1.1/CMP0–	25	P2.1/A9
4	P1.2/ECI	26	P2.2/A10
5	P1.3/CMP0/CEX0	27	P2.3/A11
6	P1.4/CMP1/CEX1	28	P2.4/A12
7	P1.5/CMP2/CEX2	29	P2.5/A13
8	P1.6/CMP3/CEX3	30	P2.6/A14
9	P1.7/CEX4	31	P2.7/A15
10	$\overline{RST}$	32	$\overline{PSEN}$
11	RxD/P3.0	33	ALE/$\overline{PROG}$
12	NC*	34	NC*
13	TxD/P3.1	35	$\overline{EA}$/V_{PP}
14	$\overline{INT0}$/P3.2	36	P0.7/AD7
15	$\overline{INT1}$/P3.3	37	P0.6/AD6
16	T0/P3.4/CMPR–	38	P0.5/AD5
17	T1/P3.5/CMP1+	39	P0.4/AD4
18	$\overline{WR}$/P3.6/CMP2+	40	P0.3/AD3
19	$\overline{RD}$/P3.7/CMP3+	41	P0.2/AD2
20	XTAL2	42	P0.1/AD1
21	XTAL1	43	P0.0/AD0
22	V_{SS}	44	V_{CC}

* DO NOT CONNECT

SU00235

PLASTIC QUAD FLAT PACK PIN FUNCTIONS

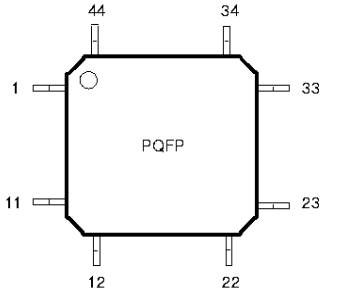

Pin	Function	Pin	Function
1	P1.5/CMP2/CEX2	23	P2.5/A13
2	P1.6/CMP3/CEX3	24	P2.6/A14
3	P1.7/CEX4	25	P2.7/A15
4	$\overline{RST}$	26	$\overline{PSEN}$
5	RxD/P3.0	27	ALE/$\overline{PROG}$
6	NC*	28	NC*
7	TxD/P3.1	29	$\overline{EA}$/V_{PP}
8	$\overline{INT0}$/P3.2	30	P0.7/AD7
9	$\overline{INT1}$/P3.3	31	P0.6/AD6
10	T0/P3.4/CMPR–	32	P0.5/AD5
11	T1/P3.5/CMP1+	33	P0.4/AD4
12	$\overline{WR}$/P3.6/CMP2+	34	P0.3/AD3
13	$\overline{RD}$/P3.7CMP3+	35	P0.2/AD2
14	XTAL2	36	P0.1/AD1
15	XTAL1	37	P0.0/AD0
16	V_{SS}	38	V_{CC}
17	NC*	39	NC*
18	P2.0/A8	40	T2/P1.0/CMP0+
19	P2.1/A9	41	T2EX/P1.1/CMP0–
20	P2.2/A10	42	P1.2/ECI
21	P2.3/A11	43	P1.3/CMP0/CEX0
22	P2.4/A12	44	P1.4/CMP1/CEX1

* DO NOT CONNECT

SU00236

LOGIC SYMBOL

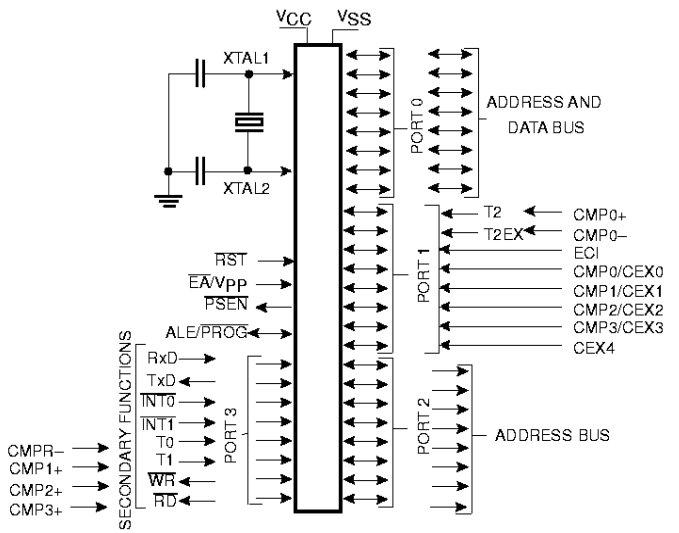

SU00237

BLOCK DIAGRAM

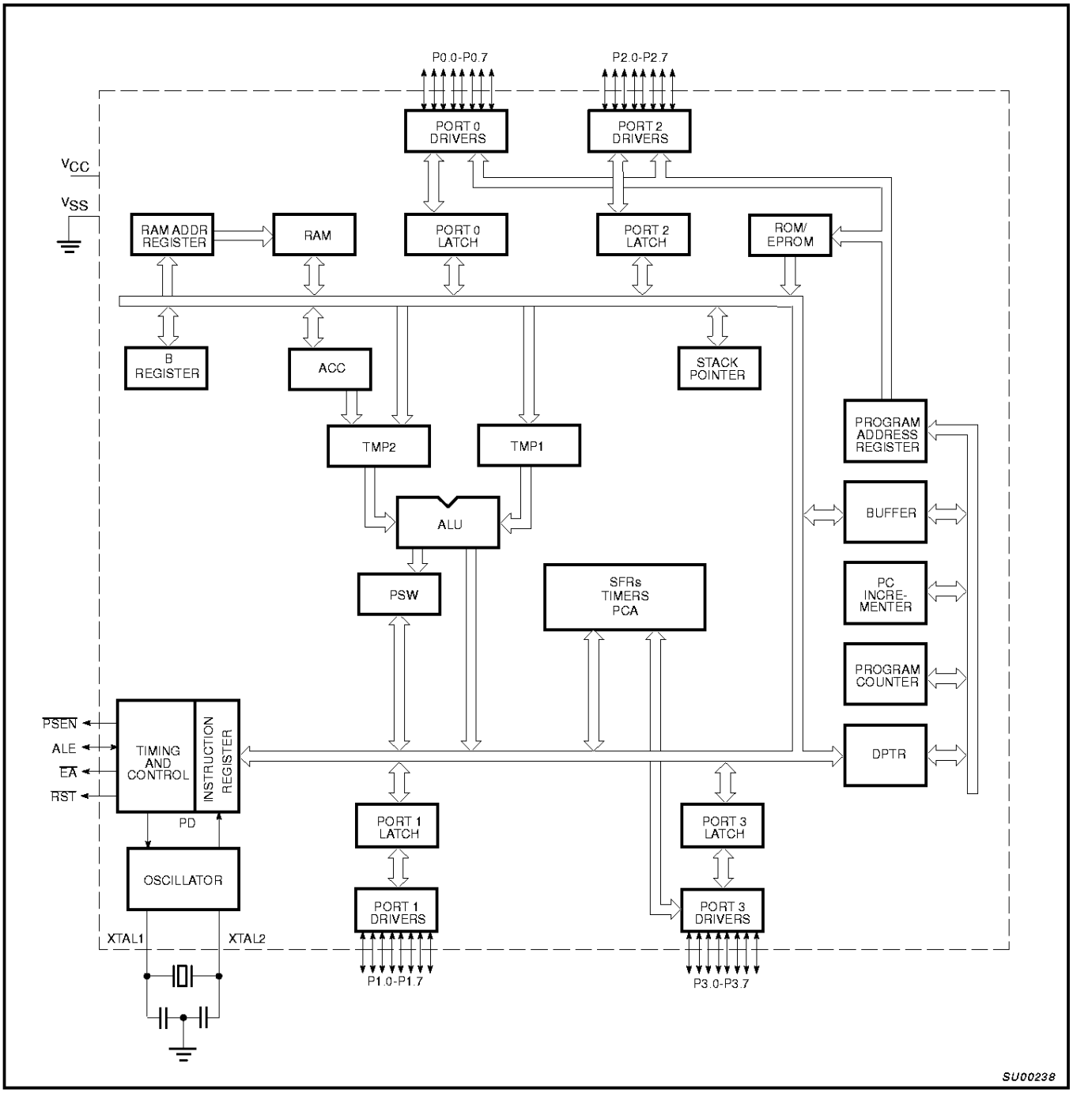

PIN DESCRIPTIONS

MNEMONIC	PIN NUMBER DIP	LCC	QFP	TYPE	NAME AND FUNCTION
V_{SS}	20	22	16	I	**Ground:** 0V reference.
V_{CC}	40	44	38	I	**Power Supply:** This is the power supply voltage for normal, idle, and power-down operation.
P0.0-0.7	39-32	43-36	37-30	I/O	**Port 0:** Port 0 is an open-drain bidirectional I/O port. Port 0 pins that have 1s written to them float and can be used as high-impedance inputs. Port 0 is also the multiplexed low-order address and data bus during accesses to external program and data memory. In this application, it uses strong internal pull-ups when emitting 1s. Port 0 also receives code bytes during EPROM programming and outputs code bytes during program verification. External pull-ups are required during program verification. During reset, port 0 will be asynchronously driven low and will remain low until written to by software. All port 0 pins have Schmitt trigger inputs with 200mV hysteresis. A weak pulldown on port 0 guarantees positive leakage current (see DC Electrical Characteristics: I_{L1}).
P1.0-P1.7	1-8	2-9	40-44 1-3	I/O	**Port 1:** Port 1 is an 8-bit bidirectional I/O port. Port 1 pins have internal pull-ups such that pins that have 1s written to them can be used as inputs but will source current when externally pulled low (see DC Electrical Characteristics: I_{IL}). Port 1 receives the low-order address byte during program memory verification and EPROM programming. During reset, port 1 will be asynchronously driven low and will remain low until written to by software. All port 1 pins have Schmitt trigger inputs with 50mV hysteresis. Port 1 pins also serve alternate functions as follows:
	1	2	40	I/O	**P1.0 T2** Timer 2 external I/O – clockout (programmable) **CMP0+** Comparator 0 positive input
	2	3	41	I	**P1.1 T2EX** Timer 2 capture input **CMP0-** Comparator 0 negative input
	3	4	42	I	**P1.2 ECI** PCA count input
	4	5	43	I/O	**P1.3 CEX0** PCA module 0 external I/O **CMP0** Comparator 0 output
	5	6	44	I/O	**P1.4 CEX1** PCA module 1 external I/O **CMP1** Comparator 1 output
	6	7	1	I/O	**P1.5 CEX2** PCA module 2 external I/O **CMP2** Comparator 2 output
	7	8	2	I/O	**P1.6 CEX3** PCA module 3 external I/O **CMP3** Comparator 3 output
	8	9	3	I/O	**P1.7 CEX4** PCA module 4 external I/O
P2.0-P2.7	21-28	24-31	18-25	I/O	**Port 2:** Port 2 is an 8-bit bidirectional I/O port with internal pull-ups. Port 2 pins that have 1s written to them can be used as inputs, but will source current when externally pulled low (see DC Electrical Characteristics: I_{IL}). Port 2 emits the high-order address byte during accesses to external program and data memory that use 16-bit addresses (MOVX @DPTR). In this application, it uses strong internal pull-ups when emitting 1s. Port 2 receives the high-order address byte during program verification and EPROM programming. During reset, port 2 will be asynchronously driven low and will remain low until written to by software. Port 2 can be made open drain by writing to the P2OD register (AIH). In open drain mode, weak pulldowns on port 2 guarantee positive leakage current (see DC Electrical Characteristics I_{L1}).
P3.0-P3.7	10-17	11, 13-19	5, 7-13	I/O	**Port 3:** Port 3 is an 8-bit bidirectional I/O port with internal pull-ups. Port 3 pins except P3.1 that have 1s written to them can be used as inputs but will source current when externally pulled low (see DC Electrical Characteristics: I_{IL}). P3.1 will be a high impedance pin except while transmitting serial data, in which case the strong pull-up will remain on continuously when outputting a 1 level. The P3.1 output drive level when transmitting can be set to one of two levels by the writing to the P3.1 register bit. During reset all pins (except P3.1) will be asynchronously driven low and will remain low until written to by software. All port 3 pins have Schmitt trigger inputs with 200mV hysteresis, except P3.2 and P3.3, which have 50mV hysteresis. Port 3 pins serve alternate functions as follows:

PIN DESCRIPTIONS (Continued)

MNEMONIC	PIN NUMBER DIP	LCC	QFP	TYPE	NAME AND FUNCTION
					Port 3: (continued)
	10	11	5	I	**P3.0 RxD** Serial receive port
	11	13	7	O	**P3.1 TxD** Serial transmit port enabled only when transmitting serial data
	12	14	8	I	**P3.2 $\overline{INT0}$** External interrupt 0
	13	15	9	I	**P3.3 $\overline{INT1}$** External interrupt 1
	14	16	10	I	**P3.4 T0** Timer/counter 0 input **CMPR-** Common - reference to comparators 1, 2, 3
	15	17	11	I	**P3.5 T1** Timer/counter 1 input **CMP1+** Comparator 1 positive input
	16	18	12	O	**P3.6 $\overline{WR}$** External data memory write strobe **CMP2+** Comparator 2 positive input
	17	19	13	O	**P3.7 $\overline{RD}$** External data memory read strobe **CMP3+** Comparator 3 positive input
$\overline{RST}$	9	10	4	I	**Reset:** A low on this pin asynchronously resets all port pins to a low state except P3.1. The pin must be held low with the oscillator running for 24 oscillator cycles to initialize the internal registers. An internal diffused resistor to V_{CC} permits a power on reset using only an external capacitor to V_{SS}. RST has a Schmitt trigger input stage to provide additional noise immunity with a slow rising input voltage.
ALE/$\overline{PROG}$	30	33	27	I/O	**Address Latch Enable/Program Pulse:** Output pulse for latching the low byte of the address during an access to external memory. In normal operation, ALE is emitted at a constant rate of 1/6 the oscillator frequency, and can be used for external timing or clocking. Note that one ALE pulse is skipped during each access to external data memory. ALE is switched off if the bit 0 in the AUXR register (8EH) is set. This pin is also the program pulse input ($\overline{PROG}$) during EPROM programming.
$\overline{PSEN}$	29	32	26	O	**Program Store Enable:** The read strobe to external program memory. When the device is executing code from the external program memory, $\overline{PSEN}$ is activated twice each machine cycle, except that two $\overline{PSEN}$ activations are skipped during each access to external data memory. $\overline{PSEN}$ is not activated during fetches from internal program memory.
$\overline{EA}$/V_{PP}	31	35	29	I	**External Access Enable/Programming Supply Voltage:** $\overline{EA}$ must be externally held low to enable the device to fetch code from external program memory locations 0000H to 1FFFH. If $\overline{EA}$ is held high, the device executes from internal program memory unless the program counter contains an address greater than 1FFFH. This pin also receives the 12.75V programming supply voltage (V_{PP}) during EPROM programming.
XTAL1	19	21	15	I	**Crystal 1:** Input to the inverting oscillator amplifier and input to the internal clock generator circuits.
XTAL2	18	20	14	O	**Crystal 2:** Output from the inverting oscillator amplifier.

Table 1. 87C575 Special Function Registers

SYMBOL	DESCRIPTION	DIRECT ADDRESS	BIT ADDRESS, SYMBOL, OR ALTERNATIVE PORT FUNCTION MSB							LSB	RESET VALUE
ACC*	Accumulator	E0H	E7	E6	E5	E4	E3	E2	E1	E0	00H
AUXR#	Auxiliary	8EH	–	–	–	–	–	–	LO	AO	xxxxxx00B
B*	B register	F0H	F7	F6	F5	F4	F3	F2	F1	F0	00H
CCAP0H#	Module 0 Capture High	FAH									xxxxxxxxB
CCAP1H#	Module 1 Capture High	FBH									xxxxxxxxB
CCAP2H#	Module 2 Capture High	FCH									xxxxxxxxB
CCAP3H#	Module 3 Capture High	FDH									xxxxxxxxB
CCAP4H#	Module 4 Capture High	FEH									xxxxxxxxB
CCAP0L#	Module 0 Capture Low	EAH									xxxxxxxxB
CCAP1L#	Module 1 Capture Low	EBH									xxxxxxxxB
CCAP2L#	Module 2 Capture Low	ECH									xxxxxxxxB
CCAP3L#	Module 3 Capture Low	EDH									xxxxxxxxB
CCAP4L#	Module 4 Capture Low	EEH									xxxxxxxxB
CCAPM0#	Module 0 Mode	DAH	–	ECOM	CAPP	CAPN	MAT	TOG	PWM	ECCF	x0000000B
CCAPM1#	Module 1 Mode	DBH	–	ECOM	CAPP	CAPN	MAT	TOG	PWM	ECCF	x0000000B
CCAPM2#	Module 2 Mode	DCH	–	ECOM	CAPP	CAPN	MAT	TOG	PWM	ECCF	x0000000B
CCAPM3#	Module 3 Mode	DDH	–	ECOM	CAPP	CAPN	MAT	TOG	PWM	ECCF	x0000000B
CCAPM4#	Module 4 Mode	DEH	–	ECOM	CAPP	CAPN	MAT	TOG	PWM	ECCF	x0000000B
			DF	DE	DD	DC	DB	DA	D9	D8	
CCON*#	PCA Counter Control	D8H	CF	CR	–	CCF4	CCF3	CCF2	CCF1	CCF0	00x00000B
CH#	PCA Counter High	F9H									00H
CL#	PCA Counter Low	E9H									00H
CMOD#	PCA Counter Mode	D9H	CIDL	WDTE	–	–	–	CPS1	CPS0	ECF	00xxx000B
			EF	EE	ED	EC	EB	EA	E9	E8	
CMP*#	Comparator	E8H	EC3DP	EC2DP	EC1DP	EC0DP	C3RO	C2RO	C1RO	C0RO	00H
CMPE#	Comparator Enable	91H	EC3TDC	EC2TDC	EC1TDC	EC0TDC	EC3OD	EC2OD	EC1OD	EC0OD	00H
DPTR:	Data Pointer (2 bytes)										
DPH	Data Pointer High	83H									00H
DPL	Data Pointer Low	82H									00H
			AF	AE	AD	AC	AB	AA	A9	A8	
IE*	Interrupt Enable	A8H	EA	EC	ET2	ES	ET1	EX1	ET0	EX0	00H
			BF	BE	BD	BC	BB	BA	B9	B8	
IP*	Interrupt Priority	B8H	–	PPC	PT2	PS	PT1	PX1	PT0	PX0	x0000000B
			87	86	85	84	83	82	81	80	
P0*	Port 0	80H	AD7	AD6	AD5	AD4	AD3	AD2	AD1	AD0	00H
			97	96	95	94	93	92	91	90	
P1*	Port 1	90H	CEX4	CEX3	CEX2	CEX1	CEX0	EXI	T2EX	T2	00H
			A7	A6	A5	A4	A3	A2	A1	A0	
P2*	Port 2	A0H	AD15	AD14	AD13	AD12	AD11	AD10	AD9	AD8	00H
			B7	B6	B5	B4	B3	B2	B1	B0	
P3*	Port 3	B0H	$\overline{RD}$	$\overline{WR}$	T1	T0	$\overline{INT1}$	$\overline{INT0}$	TxD	RxD	00H

* SFRs are bit addressable.
\# SFRs are modified from or added to the 80C51 SFRs.

Table 1. 87C575 Special Function Registers (Continued)

SYMBOL	DESCRIPTION	DIRECT ADDRESS	BIT ADDRESS, SYMBOL, OR ALTERNATIVE PORT FUNCTION MSB							LSB	RESET VALUE
P2OD#	Port 2 Pullup Disable	A1H									00H
PCON#	Power Control	87H	SMOD1	SMOD0	OSF[1]	POF[1]	LVF[1]	GF0	PD	IDL	00xxx000B
			D7	D6	D5	D4	D3	D2	D1	D0	
PSW*	Program Status Word	D0H	CY	AC	F0	RS1	RS0	OV	–	P	00H
RACAP2H#	Timer 2 Capture High	CBH									00H
RACAP2L#	Timer 2 Capture Low	CAH									00H
SADDR#	Slave Address	A9H									00H
SADEN#	Slave Address Mask	B9H									00H
SBUF	Serial Data Buffer	99H									xxxxxxxxB
			9F	9E	9D	9C	9B	9A	99	98	
SCON*	Serial Control	98H	SM0	SM1	SM2	REN	TB8	RB8	TI	RI	00H
SP	Stack Pointer	81H									07H
			8F	8E	8D	8C	8B	8A	89	88	
TCON*	Timer Control	88H	TF1	TR1	TF0	TR0	IE1	IT1	IE0	IT0	00H
			CF	CE	CD	CC	CB	CA	C9	C8	
T2CON*	Timer 2 Control	C8H	TF2	EXF2	RCLK	TCLK	EXEN2	TR2	C/T2	CP/RL2	00H
T2MOD#	Timer 2 Mode Control	C9H	–	–	–	–	–	–	T2OE[2]	DCEN	xxxxxxx0B
TH0	Timer High 0	8CH									00H
TH1	Timer High 1	8DH									00H
TH2#	Timer High 2	CDH									00H
TL0	Timer Low 0	8AH									00H
TL1	Timer Low 1	8BH									00H
TL2#	Timer Low 2	CCH									00H
TMOD	Timer Mode	89H	GATE	C/T	M1	M0	GATE	C/T	M1	M0	00H
			C7	C6	C5	C4	C3	C2	C1	C0	
WDCON*#	Watchdog Timer Control	C0H	PRE2	PRE1	PRE0	LVRE	OFRE	WDRUN	WDTOF	WDMOD	11111101B
WDL#	Watchdog Timer Reload	C1H									00H
WFEED1#	Watchdog Feed 1	C2H									xxH
WFEED2#	Watchdog Feed 2	C3H									xxH

* SFRs are bit addressable.
\# SFRs are modified from or added to the 80C51 SFRs.
1. Reset value depends on reset source.
2. Programmable clock-out.

POWER ON CLEAR/ POWER ON FLAG

An on-chip Power On Detect Circuit resets the 8XC575 and sets the Power Off Flag (PCON.4) on power up or if V_{CC} drops to zero momentarily. The POF can only be cleared by software. The RST pin is not driven by the power on detect circuit. The POF can be read by software to determine that a power failure has occurred and can also be set by software.

LOW VOLTAGE DETECT

An on-chip Low Voltage Detect circuit sets the Low Voltage Flag (PCON.3) if V_{CC} drops below V_{LOW} (see DC Electrical Characteristics) and resets the 8XC575 if the Low Voltage Reset Enable bit (WDCON.4) is set. If the LVRE is cleared, the reset is disabled but LVF will still be set if V_{CC} is low. The RST pin is not driven by the low voltage detect circuit. The LVF can be read by software to determine that V_{CC} was low. The LVF can be set or cleared by software.

OSCILLATOR FAIL DETECT

An on-chip Oscillator Fail Detect circuit sets the Oscillator Fail Flag (PCON.5) if the oscillator frequency drops below OSCF for one or more cycles (see AC Electrical Characteristics: OSCF) and resets the 8XC575 if the Oscillator Fail Reset Enable bit (WDCON.3) is set. If OFRE is cleared, the reset is disabled but OSF will still be set if the oscillator fails. The RST pin is not driven by the oscillator fail detect circuit. The OSF can be read by software to determine that an oscillator failure has occurred. The OSF can be set or cleared by software.

LOW ACTIVE RESET

One of the most notable features on this part is the low active reset. At this time this is the only 80C51 derivative available that has low active reset. This feature makes it easier to interface the 8XC575 into an application to accommodate the power-on and low voltage conditions that can occur. The low active reset operates exactly the same as high active reset with the exception that the part is put into the reset mode by applying a low level to the reset pin. For power-on reset it is also necessary to invert the power-on reset circuit; connecting the 8.2K resistor from the reset pin to V_{CC} and the 10µf capacitor from the reset pin to ground. Figure 1 shows all of the reset related circuitry.

When reset the port pins on the 87C575 are driven low asynchronously. This is different from all other 80C51 derivatives.

The 8XC575 also has Low voltage detection circuitry that will, if enabled, force the part to reset when V_{CC} (on the part) fails below a set level. Low Voltage Reset is enabled by a normal reset. Low Voltage Reset can be disabled by clearing LVRE (bit 4 in the WDCON SFR) then executing a watchdog feed sequence (A5H to WFEED1 followed immediately by 5A to WFEED2). In addition there is a flag (LVF) that is set if a low voltage condition is detected. The LVF flag is set even if the Low Voltage detection circuitry is disabled. Notice that the Low voltage detection circuitry does not drive the RST# pin so the LVF flag is the only way that the microcontroller can determine if it has been reset due to a low voltage condition.

The 8XC575 has an on-chip power-on detection circuit that sets the POF (PCON.4) flag on power up or if the V_{CC} level momentarily drops to 0V. This flag can be used to determine if the part is being started from a power-on (cold start) or if a reset has occurred due to another condition (warm start).

TIMERS

The 87C575 has four on-chip timers.

Timers 0 and 1 are identical in every way to Timers 0 and 1 on the 80C51.

Timer 2 on the 8XC575 is identical to the 80C52 Timer 2 (described in detail in the 80C52 overview) with the exception that it is an up or down counter. To configure the Timer to count down the DCEN bit in the T2MOD special function register must be set and a low level must be present on the T2EX pin (P1.1).

The Watchdog timer operation and implementation is the same as that for the 8XC550 (described in the 8XC550 overview) with the exception that the reset values of the WDCON and WDL special function registers have been changed. The changes in these registers cause the watchdog timer to be enabled with a timeout of 98304 × T_{OSC} when the part is reset. The watchdog can be disabled by executing a valid feed sequence and then clearing WDRUN (bit 2 in the WDCON SFR).

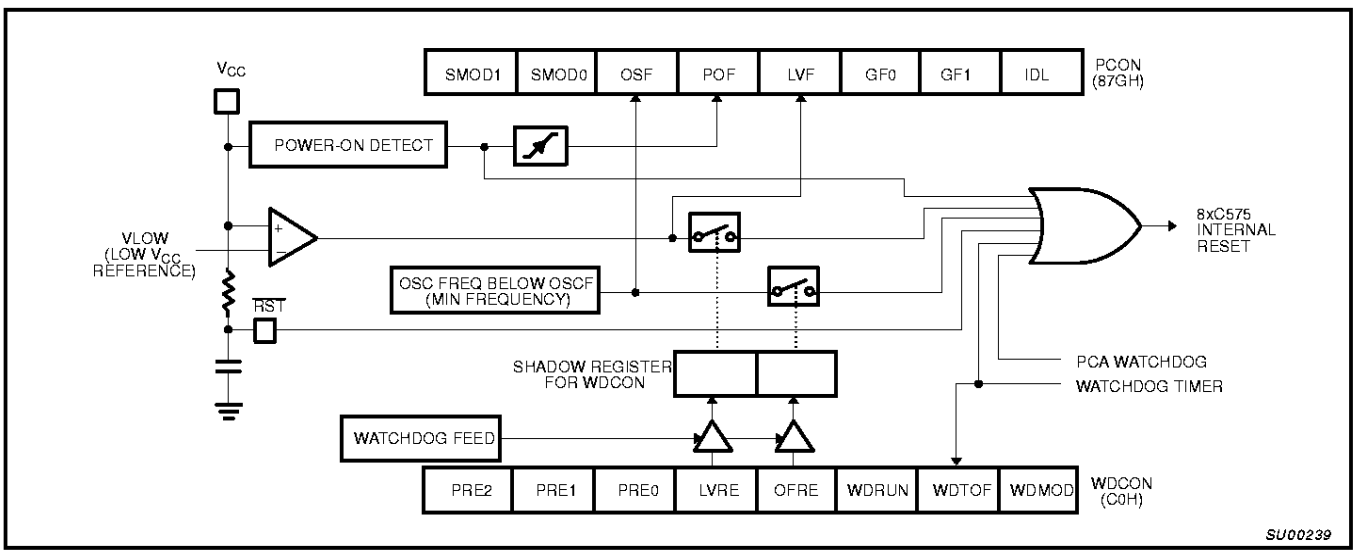

Figure 1. Reset Circuitry

PROGRAMMABLE COUNTER ARRAY (PCA)

The Programmable Counter Array is a special Timer that has five 16-bit capture/compare modules associated with it. Each of the modules can be programmed to operate in one of four modes: rising and/or falling edge capture, software timer, high-speed output, or pulse width modulator. Each module has a pin associated with it in port 1. Module 0 is connected to P1.3(CEX0), module 1 to P1.4(CEX1), etc.. The basic PCA configuration is shown in Figure 2.

The PCA timer is a common time base for all five modules and can be programmed to run at: 1/12 the oscillator frequency, 1/4 the oscillator frequency, the Timer 0 overflow, or the input on the ECI pin (P1.2). The timer count source is determined from the CPS1 and CPS0 bits in the CMOD SFR as follows (see Figure 3):

CPS1	CPS0	PCA Timer Count Source
0	0	1/12 oscillator frequency
0	1	1/4 oscillator frequency
1	0	Timer 0 overflow
1	1	External Input at ECI pin

In the CMOD SFR are three additional bits associated with the PCA. They are CIDL which allows the PCA to stop during idle mode, WDTE which enables or disables the watchdog function on module 4, and ECF which when set causes an interrupt and the PCA overflow flag CF (in the CCON SFR) to be set when the PCA timer overflows. These functions are shown in Figure 3.

The watchdog timer function is implemented in module 4 as implemented in other parts that have a PCA that are available on the market. However, if a watchdog timer is required in the target application, it is recommended to use the hardware watchdog timer that is implemented on the 87C575 separately from the PCA (see Figure 14).

The CCON SFR contains the run control bit for the PCA and the flags for the PCA timer (CF) and each module (refer to Figure 6). To run the PCA the CR bit (CCON.6) must be set by software. The PCA is shut off by clearing this bit. The CF bit (CCON.7) is set when the PCA counter overflows and an interrupt will be generated if the ECF bit in the CMOD register is set, The CF bit can only be cleared by software. Bits 0 through 4 of the CCON register are the flags for the modules (bit 0 for module 0, bit 1 for module 1, etc.) and are set by hardware when either a match or a capture occurs. These flags also can only be cleared by software. The PCA interrupt system shown in Figure 4.

Each module in the PCA has a special function register associated with it. These registers are: CCAPM0 for module 0, CCAPM1 for module 1, etc. (see Figure 7). The registers contain the bits that control the mode that each module will operate in. The ECCF bit (CCAPMn.0 where n=0, 1, 2, 3, or 4 depending on the module) enables the CCF flag in the CCON SFR to generate an interrupt when a match or compare occurs in the associated module. PWM (CCAPMn.1) enables the pulse width modulation mode. The TOG bit (CCAPMn.2) when set causes the CEX output associated with the module to toggle when there is a match between the PCA counter and the module's capture/compare register. The match bit MAT (CCAPMn.3) when set will cause the CCFn bit in the CCON register to be set when there is a match between the PCA counter and the module's capture/compare register.

The next two bits CAPN (CCAPMn.4) and CAPP (CCAPMn.5) determine the edge that a capture input will be active on. The CAPN bit enables the negative edge, and the CAPP bit enables the positive edge. If both bits are set both edges will be enabled and a capture will occur for either transition. The last bit in the register ECOM (CCAPMn.6) when set enables the comparator function. Figure 8 shows the CCAPMn settings for the various PCA functions.

There are two additional registers associated with each of the PCA modules. They are CCAPnH and CCAPnL and these are the registers that store the 16-bit count when a capture occurs or a compare should occur. When a module is used in the PWM mode these registers are used to control the duty cycle of the output.

PCA Capture Mode

To use one of the PCA modules in the capture mode either one or both of the CCAPM bits CAPN and CAPP for that module must be set. The external CEX input for the module (on port 1) is sampled for a transition. When a valid transition occurs the PCA hardware loads the value of the PCA counter registers (CH and CL) into the module's capture registers (CCAPnL and CCAPnH). If the CCFn bit for the module in the CCON SFR and the ECCFn bit in the CCAPMn SFR are set then an interrupt will be generated. Refer to Figure 9.

16-bit Software Timer Mode

The PCA modules can be used as software timers by setting both the ECOM and MAT bits in the modules CCAPMn register. The PCA timer will be compared to the module's capture registers and when a match occurs an interrupt will occur if the CCFn (CCON SFR) and the ECCFn (CCAPMn SFR) bits for the module are both set (see Figure 10).

High Speed Output Mode

In this mode the CEX output (on port 1) associated with the PCA module will toggle each time a match occurs between the PCA counter and the module's capture registers. To activate this mode the TOG, MAT, and ECOM bits in the module's CCAPMn SFR must be set (see Figure 11).

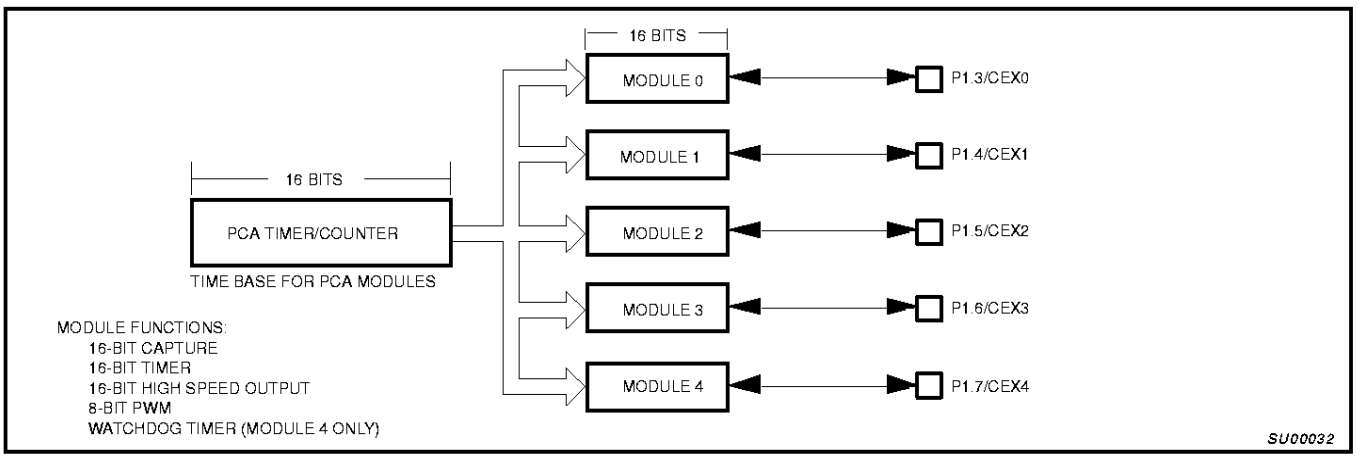

Figure 2. Programmable Counter Array (PCA)

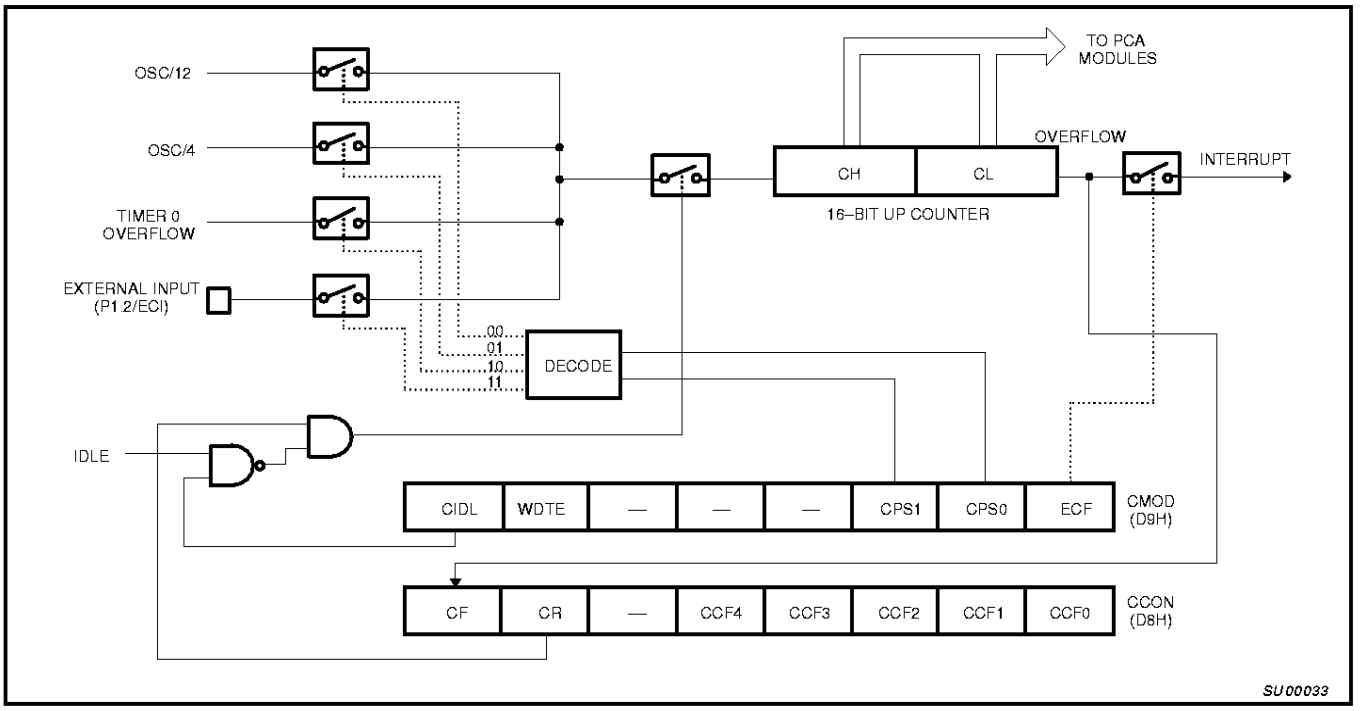

Figure 3. PCA Timer/Counter

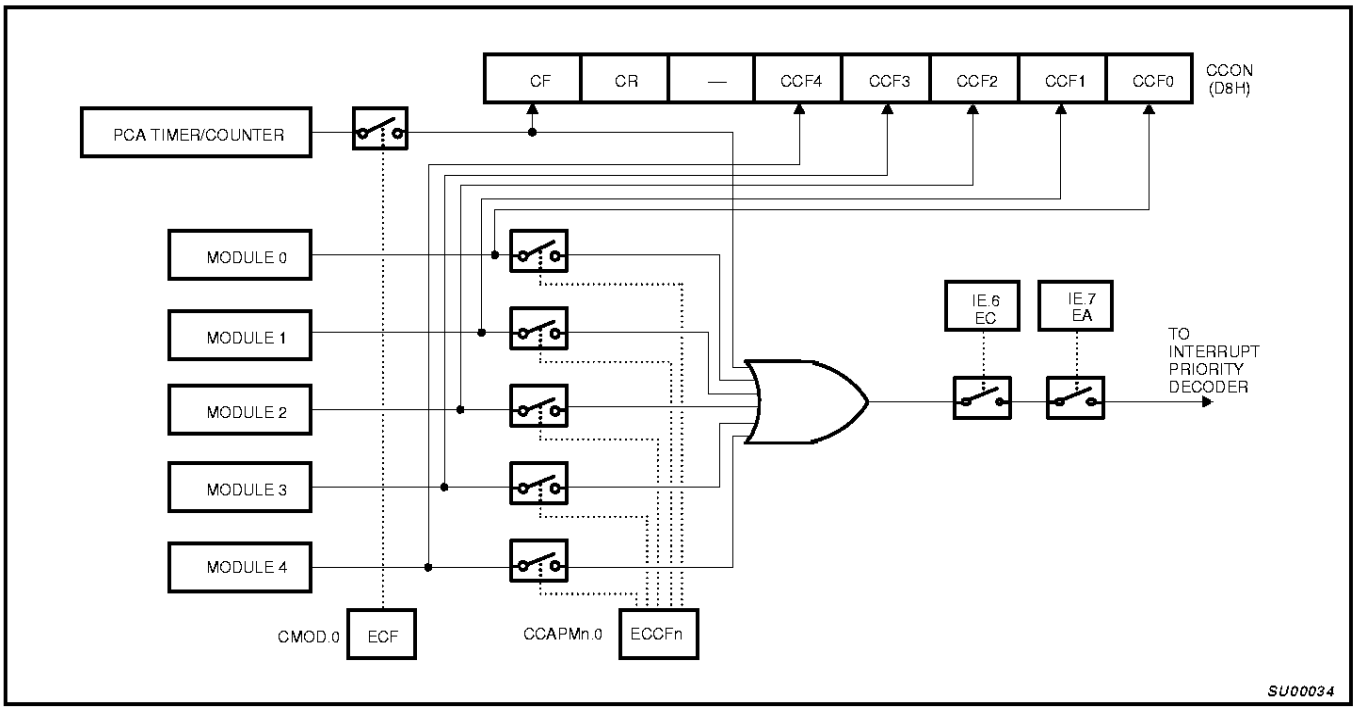

Figure 4. PCA Interrupt System

CMOD Address = OD9H Reset Value = 00XX X000B

Bit Addressable

	CIDL	WDTE	–	–	–	CPS1	CPS0	ECF
Bit:	7	6	5	4	3	2	1	0

Symbol	Function
CIDL	Counter Idle control: CIDL = 0 programs the PCA Counter to continue functioning during idle Mode. CIDL = 1 programs it to be gated off during idle.
WDTE	Watchdog Timer Enable: WDTE = 0 disables Watchdog Timer function on PCA Module 4. WDTE = 1 enables it.
–	Not implemented, reserved for future use.*
CPS1	PCA Count Pulse Select bit 1.
CPS0	PCA Count Pulse Select bit 0.

CPS1	CPS0	Selected PCA Input**	
0	0	0	Internal clock, $f_{OSC} \div 12$
0	1	1	Internal clock, $f_{OSC} \div 4$
1	0	2	Timer 0 overflow
1	1	3	External clock at ECI/P1.2 pin (max. rate = $f_{OSC} \div 8$)

ECF	PCA Enable Counter Overflow interrupt: ECF = 1 enables CF bit in CCON to generate an interrupt. ECF = 0 disables that function of CF.

NOTE:
* User software should not write 1s to reserved bits. These bits may be used in future 8051 family products to invoke new features. In that case, the reset or inactive value of the new bit will be 0, and its active value will be 1. The value read from a reserved bit is indeterminate.
** f_{OSC} = oscillator frequency

SU00035

Figure 5. CMOD: PCA Counter Mode Register

CCON Address = OD8H Reset Value = 00X0 0000B

Bit Addressable

	CF	CR	–	CCF4	CCF3	CCF2	CCF1	CCF0
Bit:	7	6	5	4	3	2	1	0

Symbol	Function
CF	PCA Counter Overflow flag. Set by hardware when the counter rolls over. CF flags an interrupt if bit ECF in CMOD is set. CF may be set by either hardware or software but can only be cleared by software.
CR	PCA Counter Run control bit. Set by software to turn the PCA counter on. Must be cleared by software to turn the PCA counter off.
–	Not implemented, reserved for future use*.
CCF4	PCA Module 4 interrupt flag. Set by hardware when a match or capture occurs. Must be cleared by software.
CCF3	PCA Module 3 interrupt flag. Set by hardware when a match or capture occurs. Must be cleared by software.
CCF2	PCA Module 2 interrupt flag. Set by hardware when a match or capture occurs. Must be cleared by software.
CCF1	PCA Module 1 interrupt flag. Set by hardware when a match or capture occurs. Must be cleared by software.
CCF0	PCA Module 0 interrupt flag. Set by hardware when a match or capture occurs. Must be cleared by software.

NOTE:
* User software should not write 1s to reserved bits. These bits may be used in future 8051 family products to invoke new features. In that case, the reset or inactive value of the new bit will be 0, and its active value will be 1. The value read from a reserved bit is indeterminate.

SU00036

Figure 6. CCON: PCA Counter Control Register

CCAPMn Address CCAPM0 0DAH
CCAPM1 0DBH
CCAPM2 0DCH
CCAPM3 0DDH
CCAPM4 0DEH

Reset Value = X000 0000B

Not Bit Addressable

	–	ECOMn	CAPPn	CAPNn	MATn	TOGn	PWMn	ECCFn
Bit:	7	6	5	4	3	2	1	0

Symbol	Function
–	Not implemented, reserved for future use*.
ECOMn	Enable Comparator. ECOMn = **1** enables the comparator function.
CAPPn	Capture Positive, CAPPn = **1** enables positive edge capture.
CAPNn	Capture Negative, CAPNn = **1** enables negative edge capture.
MATn	Match. When MATn = **1**, a match of the PCA counter with this module's compare/capture register causes the CCFn bit in CCON to be set, flagging an interrupt.
TOGn	Toggle. When TOGn = **1**, a match of the PCA counter with this module's compare/capture register causes the CEXn pin to toggle.
PWMn	Pulse Width Modulation Mode. PWMn = **1** enables the CEXn pin to be used as a pulse width modulated output.
ECCFn	Enable CCF interrupt. Enables compare/capture flag CCFn in the CCON register to generate an interrupt.

NOTE:
*User software should not write 1s to reserved bits. These bits may be used in future 8051 family products to invoke new features. In that case, the reset or inactive value of the new bit will be 0, and its active value will be 1. The value read from a reserved bit is indeterminate.

SU00037

Figure 7. CCAPMn: PCA Modules Compare/Capture Registers

–	ECOMn	CAPPn	CAPNn	MATn	TOGn	PWMn	ECCFn	MODULE FUNCTION
X	0	0	0	0	0	0	0	No operation
X	X	1	0	0	0	0	X	16-bit capture by a positive-edge trigger on CEXn
X	X	0	1	0	0	0	X	16-bit capture by a negative trigger on CEXn
X	X	1	1	0	0	0	X	16-bit capture by a transition on CEXn
X	1	0	0	1	0	0	X	16-bit Software Timer
X	1	0	0	1	1	0	X	16-bit High Speed Output
X	1	0	0	0	0	1	0	8-bit PWM
X	1	0	0	1	X	0	X	Watchdog Timer

Figure 8. PCA Module Modes (CCAPMn Register)

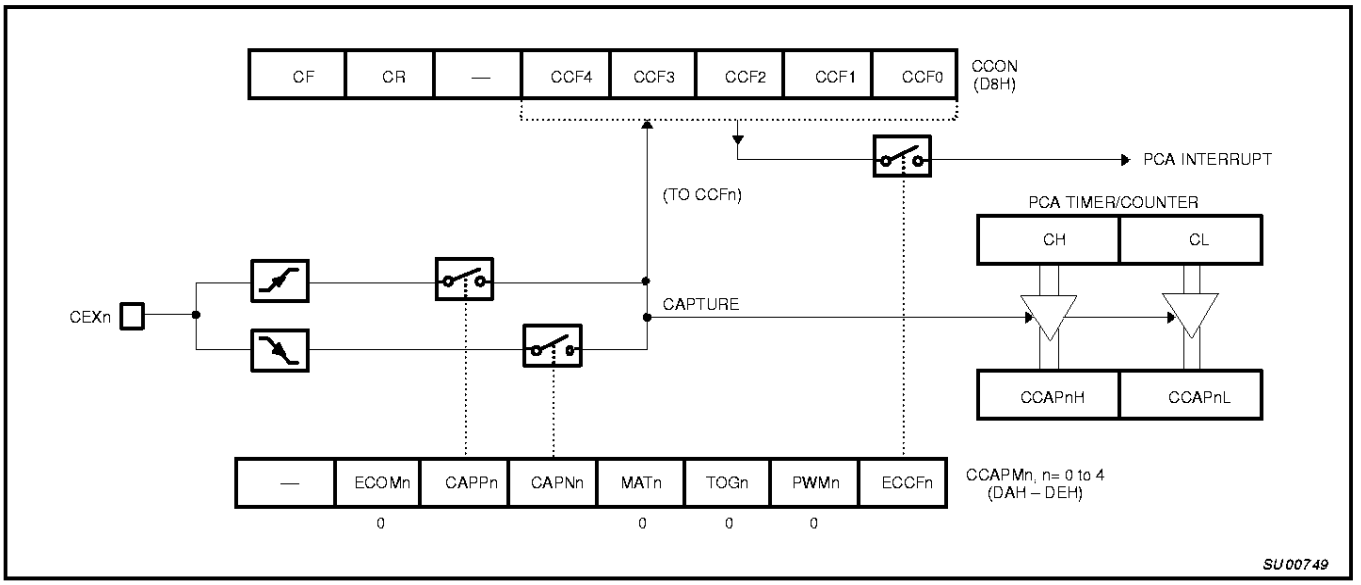

Figure 9. PCA Capture Mode

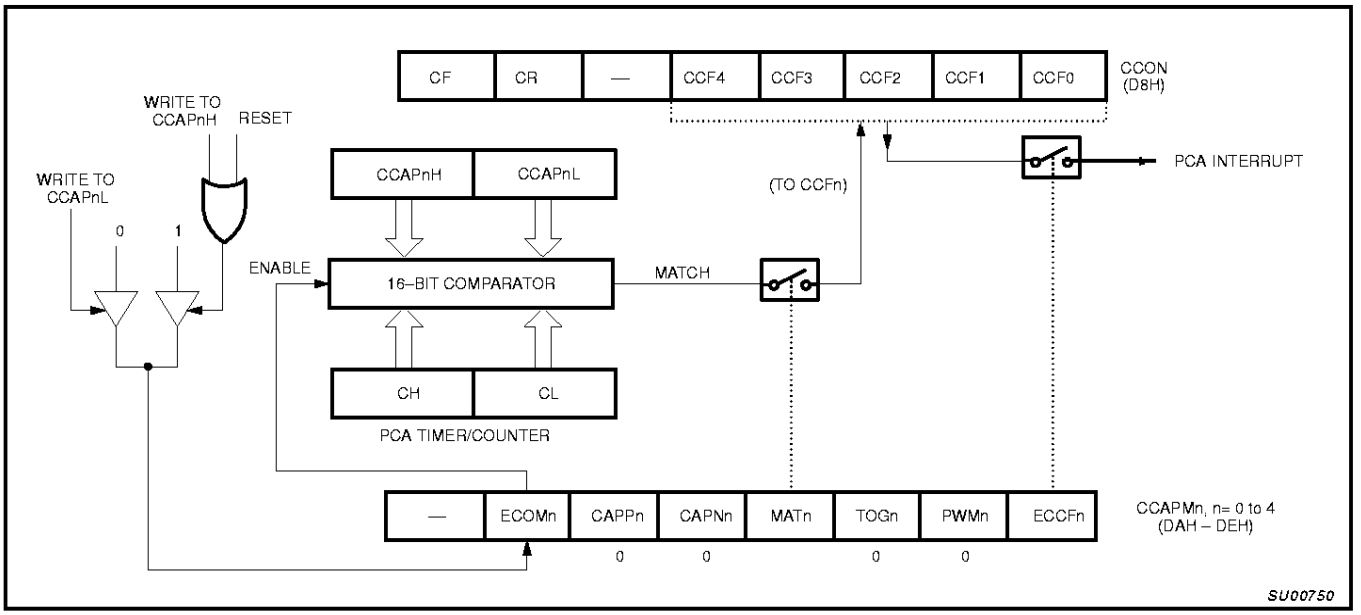

Figure 10. PCA Compare Mode

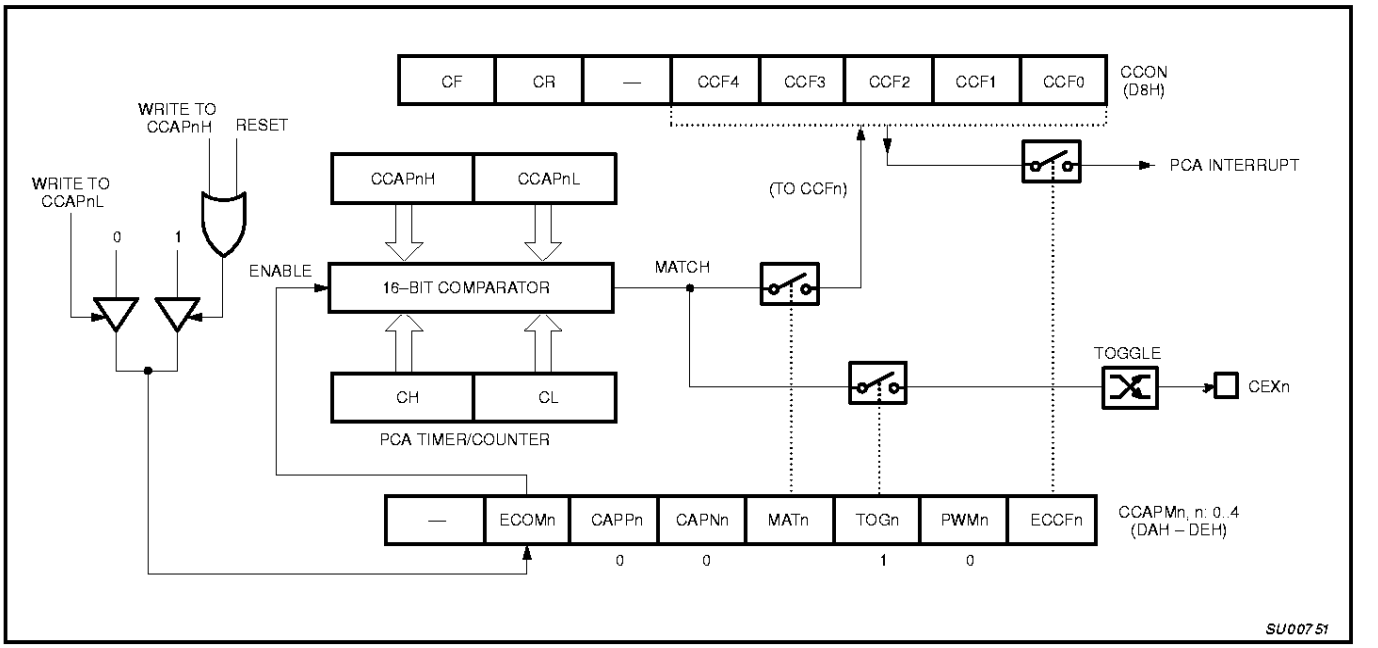

Figure 11. PCA High Speed Output Mode

Pulse Width Modulator Mode

All of the PCA modules can be used as PWM outputs. Figure 12 shows the PWM function. The frequency of the output depends on the source for the PCA timer. All of the modules will have the same frequency of output because they all share the PCA timer. The duty cycle of each module is independently variable using the module's capture register CCAPLn. When the value of the PCA CL SFR is less than the value in the module's CCAPLn SFR the output will be low, when it is equal to or greater than the output will be high. When CL overflows from FF to 00, CCAPLn is reloaded with the value in CCAPHn. the allows updating the PWM without glitches. The PWM and ECOM bits in the module's CCAPMn register must be set to enable the PWM mode.

WATCHDOG TIMER

The watchdog timer is not directly loadable by the user. Instead, the value to be loaded into the main timer is held in an autoload register or is part of the mask ROM programming. In order to cause the main timer to be loaded with the appropriate value, a special sequence of software action must take place. This operation is referred to as feeding the watchdog timer.

To feed the watchdog, two instructions must be sequentially executed successfully. No intervening instruction fetches are allowed, so interrupts should be disabled before feeding the watchdog. The instructions should move A5H to the WFEED1 register and then 5AH to the WFEED2 register. If WFEED1 is correctly loaded and WFEED2 is not correctly loaded, then an immediate underflow will occur.

The watchdog timer subsystem has two modes of operation. Its principal function is a watchdog timer. In this mode it protects the system from incorrect code execution by causing a system reset when the watchdog timer underflows as a result of a failure of software to feed the timer prior to the timer reaching its terminal count. If the user does not employ the watchdog function, the watchdog subsystem can be used as a timer. In this mode, reaching the terminal count sets a flag. In most other respects, the timer mode possesses the characteristics of the watchdog mode. This is done to protect the integrity of the watchdog function.

The watchdog timer subsystem consists of a prescaler and a main counter. The prescaler has 8 selectable taps off the final stages and the output of a selected tap provides the clock to the main counter. The main counter is the section that is loaded as a result of the software feeding the watchdog and it is the section that causes the system reset (watchdog mode) or time-out flag to be set (timer mode) if allowed to reach its terminal count.

Programming the Watchdog Timer

Both the EPROM and ROM devices have a set of SFRs for holding the watchdog autoload values and the control bits. The watchdog time-out flag is present in the watchdog control register and operates the same in all versions. In the EPROM device, the watchdog parameters (autoload value and control) are always taken from the SFRs. In the ROM device, the watchdog parameters can be mask programmed or taken from the SFRs. The selection to take the watchdog parameters from the SFRs or from the mask programmed values is controlled by EA (external access). When EA is high (internal ROM access), the watchdog parameters are taken from the mask programmed values. If the watchdog is mask programmed to the timer mode, then the autoload values and the pre-scaler taps are taken from the SFRs. When EA is low (external access), the watchdog parameters are taken from the SFRs. The user should be able to leave code in his program which initializes the watchdog SFRs even though he has migrated to the mask ROM part. This allows no code changes from EPROM prototyping to ROM coded production parts.

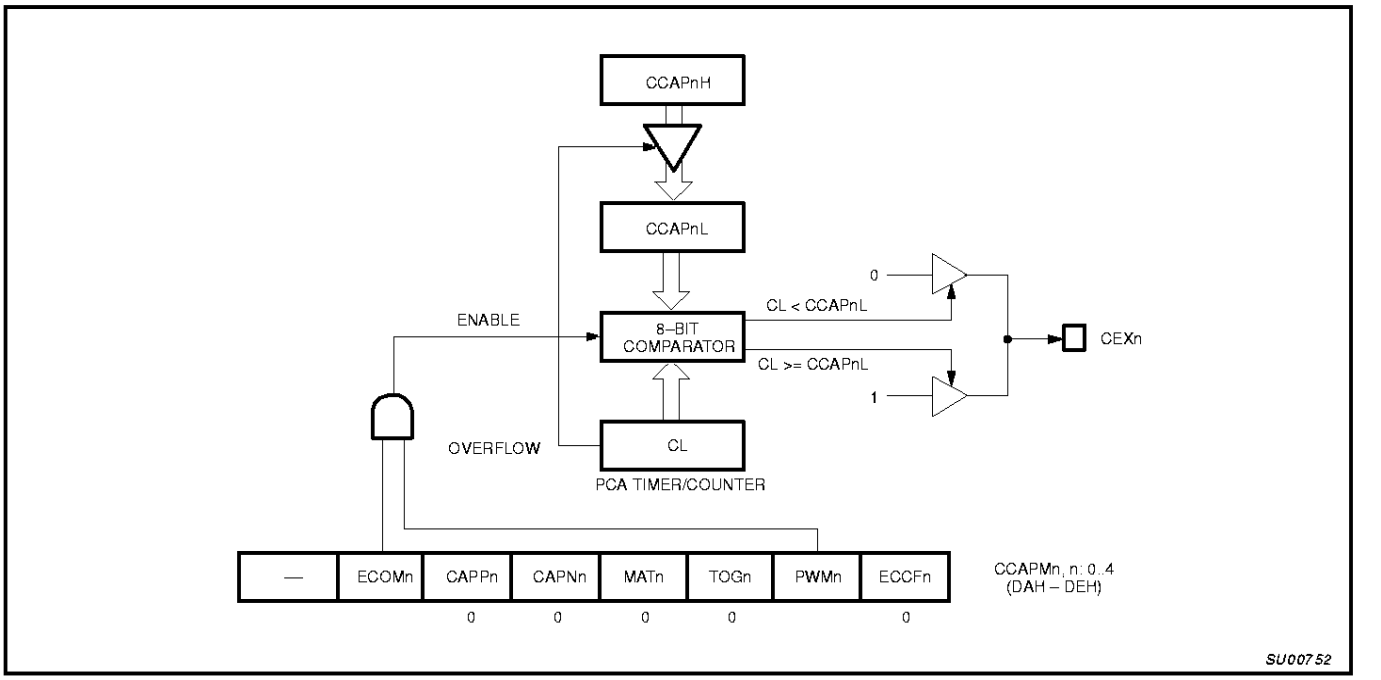

Figure 12. PCA PWM Mode

Watchdog Detailed Operation

EPROM Device (and ROMless Operation: $\overline{EA}$ = 0)

In the ROMless operation (ROM part, $\overline{EA}$ = 0) and in the EPROM device, the watchdog operates in the following manner (see Figure 14).

Whether the watchdog is in the watchdog or timer mode, when external RESET is applied, the following takes place:

- Watchdog mode bit set to watchdog mode.
- Watchdog run control bit set to ON.
- Autoload register set to 00 (min. count).
- Watchdog time-out flag cleared.
- Prescaler is cleared.
- Prescaler tap set to the highest divide.
- Autoload takes place.

The watchdog can be fed even though it is in the timer mode.

Note that the operational concept is for the watchdog mode of operation, when coming out of a hardware reset, the software should load the autoload registers, set the mode to watchdog, and then feed the watchdog (cause an autoload). The watchdog will now be starting at a known point.

If the watchdog is in the watchdog mode and running and happens to underflow at the time the external RESET is applied, the watchdog time-out flag will be cleared.

When the watchdog is in the watchdog mode and the watchdog underflows, the following action takes place (see Figure 16):

- Autoload takes place.
- Watchdog time-out flag is set
- Mode bit unchanged.
- Watchdog run bit unchanged.
- Autoload register unchanged.
- Prescaler tap unchanged.
- All other device action same as external reset.

Note that if the watchdog underflows, the program counter will start from 00H as in the case of an external reset. The watchdog time-out flag can be examined to determine if the watchdog has caused the reset condition. The watchdog time-out flag bit can be cleared by software.

When the watchdog is in the timer mode and the timer software underflows, the following action takes place:

- Autoload takes place.
- Watchdog time-out flag is set
- Mode bit unchanged.
- Watchdog run bit unchanged.
- Autoload register unchanged.
- Prescaler tap unchanged.

Mask ROM Device ($\overline{EA}$ = 1)

In the mask ROM device, the watchdog mode bit (WDMOD) is mask programmed and the bit in the watchdog command register is read only and reflects the mask programmed selection. If the mask programmed mode bit selects the timer mode, then the watchdog run bit (WDRUN) operates as described under EPROM Device. If the mask programmed bit selects the watchdog mode, then the watchdog run bit has no effect on the timer operation (see Figure 15).

Watchdog Function

The watchdog consists of a programmable prescaler and the main timer. The prescaler derives its clock from the on-chip oscillator. The prescaler consists of a divide by 12 followed by a 13 stage counter with taps from stage 6 through stage 13. This is shown in Figure 17. The tap selection is programmable. The watchdog main counter is a down counter clocked (decremented) each time the programmable prescaler underflows. The watchdog generates an underflow signal (and is autoloaded) when the watchdog is at count 0 and the clock to decrement the watchdog occurs. The watchdog is 8 bits long and the autoload value can range from 0 to FFH. (The

autoload value of 0 is permissible since the prescaler is cleared upon autoload).

This leads to the following user design equations. Definitions :t_{OSC} is the oscillator period, N is the selected prescaler tap value, W is the main counter autoload value, t_{MIN} is the minimum watchdog time-out value (when the autoload value is 0), t_{MAX} is the maximum time-out value (when the autoload value is FFH), t_D is the design time-out value.

$t_{MIN} = t_{OSC} \times 12 \times 64$

$t_{MAX} = t_{MIN} \times 128 \times 256$

$t_D = t_{MIN} \times 2^{PRESCALER} \times (W + 1)$
(where prescaler = 0, 1, 2, 3, 4, 5, 6, or 7)

Note that the design procedure is anticipated to be as follows. A t_{MAX} will be chosen either from equipment or operation considerations and will most likely be the next convenient value higher than t_D. (If the watchdog were inadvertently to start from FFH, an overflow would be guaranteed, barring other anomalies, to occur within t_{MAX}). Then the value for the prescaler would be chosen from:

prescaler = log2 (t_{MAX} / (t_{OSC} × 12 × 256)) - 6

This then also fixes t_{MIN}. An autoload value would then be chosen from:

$W = t_D / t_{MIN} - 1$

The software must be written so that a feed operation takes place every t_D seconds from the last feed operation. Some tradeoffs may need to be made. It is not advisable to include feed operations in minor loops or in subroutines unless the feed operation is a specific subroutine.

Watchdog Control Register (WDCON) (Bit Addressable) Address C0

The following bits of this register are read only in the ROM part when $\overline{EA}$ is high: WDMOD, PRE0, PRE1, and PRE2. That is, the register will reflect the mask programmed values. In the ROM part with $\overline{EA}$ high, these bits are taken from mask coded bits and are not readable by the program. WDRUN is read only in the ROM part when $\overline{EA}$ is high and WDMOD is in the watchdog mode. When WDMOD is in the timer mode, WDRUN functions normally.

The parameters written into WDMOD, PRE0, PRE1, and PRE2 by the program are not applied directly to the watchdog timer subsystem. The watchdog timer subsystem is directly controlled by a second register which stores these bits. The transfer of these bits from the user register (WDMOD) to the second control register takes place when the watchdog is fed. This prevents random code execution from directly foiling the watchdog function. This does not affect the operation where these bits are taken from mask coded values.

The reset values of the WDCON and WDL registers will be such that the timer resets to the watchdog mode with a timeout period of 12 × 64 × 128 × t_{OSC}. The watchdog timer will not generate an interrupt. Additional bits in WDCON are used to disable reset generation by the oscillator fail and low voltage detect circuits. WDCON can be written by software only by executing a valid watchdog feed sequence.

WDCON Register Bit Definitions

WDCON.7	PRE2	Prescaler Select 2, reset to 1
WDCON.6	PRE1	Prescaler Select 1, reset to 1
WDCON.5	PRE0	Prescaler Select 0, reset to 1
WDCON.4	LVRE	Low Voltage Reset Enable, reset to 1 (enabled)
WDCON.3	OFRE	Oscillator Fail Reset Enable, reset to 1 (enabled)
WDCON.2	WDRUN	Watchdog Run, reset to 1 (enabled)
WDCON.1	WDTOF	Watchdog Timeout Flag, reset to 0
WDCON.0	WDMOD	Watchdog Mode, reset to 1 (watchdog mode)

Enhanced UART

The UART operates in all of the usual modes that are described in the first section of this book for the 80C51. In addition the UART can perform framing error detect by looking for missing stop bits, and automatic address recognition. The 87C575 UART also fully supports multiprocessor communication as does the standard 80C51 UART.

When used for framing error detect the UART looks for missing stop bits in the communication. A missing bit will set the FE bit in the SCON register. The FE bit shares the SCON.7 bit with SM0 and the function of SCON.7 is determined by PCON.6 (SMOD0) (see Figure 19). If SMOD0 is set then SCON.7 functions as FE. SCON.7 functions as SM0 when SMOD0 is cleared. When used as FE SCON.7 can only be cleared by software. Refer to Figure 18.

Automatic Address Recognition

Automatic Address Recognition is a feature which allows the UART to recognize certain addresses in the serial bit stream by using hardware to make the comparisons. This feature saves a great deal of software overhead by eliminating the need for the software to examine every serial address which passes by the serial port. This feature is enabled by setting the SM2 bit in SCON. In the 9 bit UART modes, mode 2 and mode 3, the Receive Interrupt flag (RI) will be automatically set when the received byte contains either the "Given" address or the "Broadcast" address. The 9 bit mode requires that the 9th information bit is a 1 to indicate that the received information is an address and not data. Automatic address recognition is shown in Figure 20.

The 8 bit mode is called Mode 1. In this mode the RI flag will be set if SM2 is enabled and the information received has a valid stop bit following the 8 address bits and the information is either a Given or Broadcast address.

Mode 0 is the Shift Register mode and SM2 is ignored.

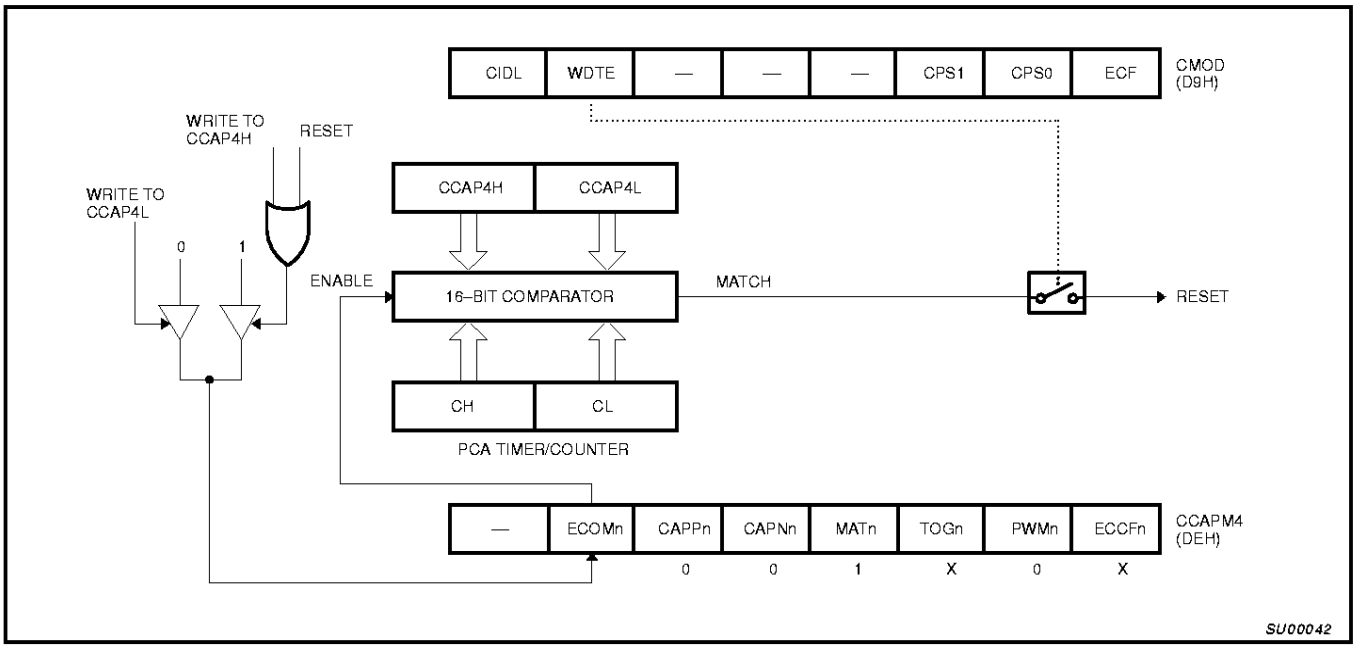

Figure 13. PCA Watchdog Timer

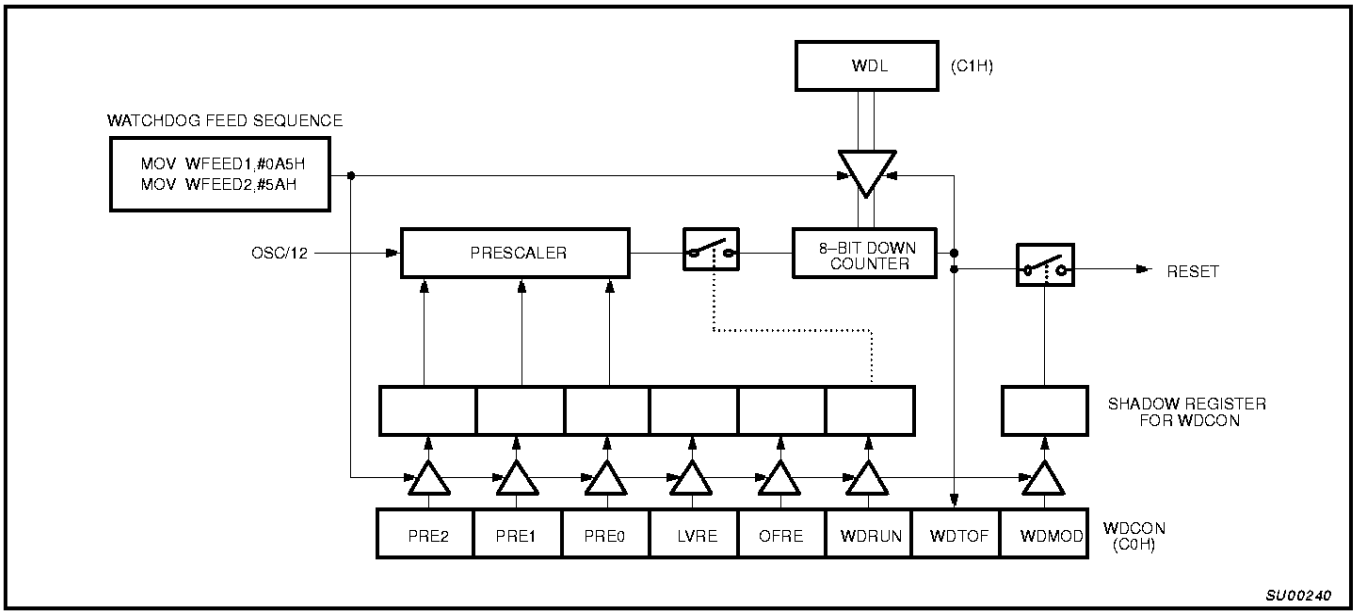

Figure 14. Watchdog Timer in 87C575 and 80C575 / 83C575 (EA = 0)

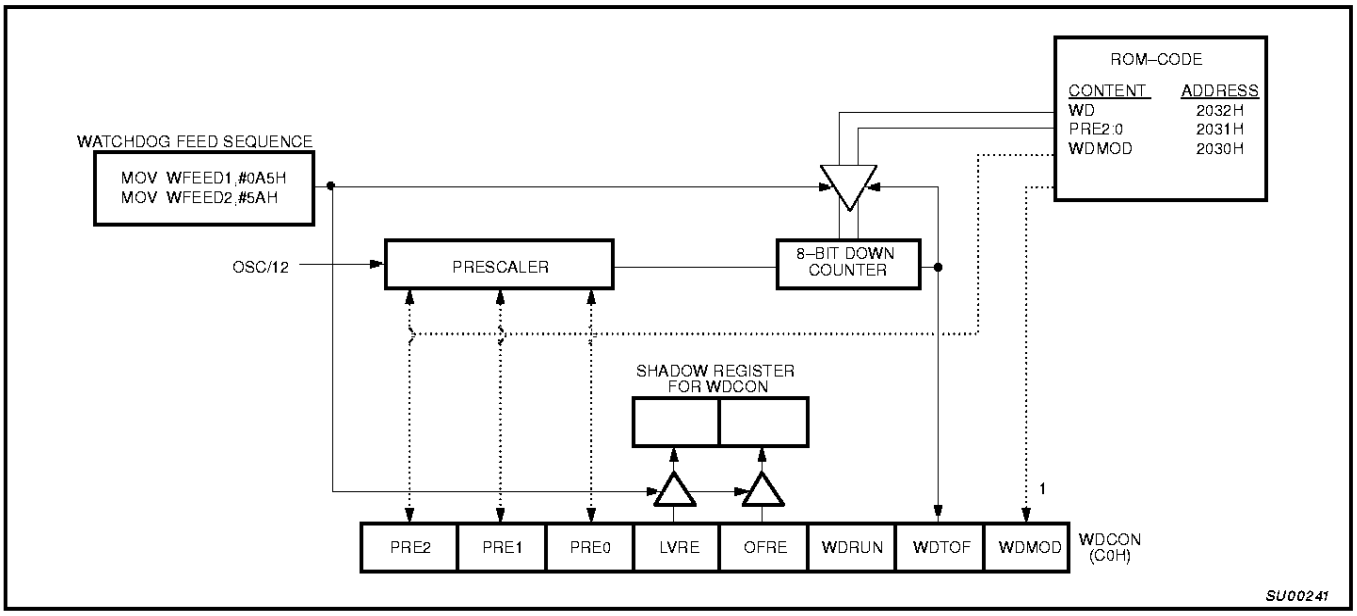

Figure 15. Watchdog Timer of 83C575 in Watchdog Mode (EA = 1, WDMOD = 1)

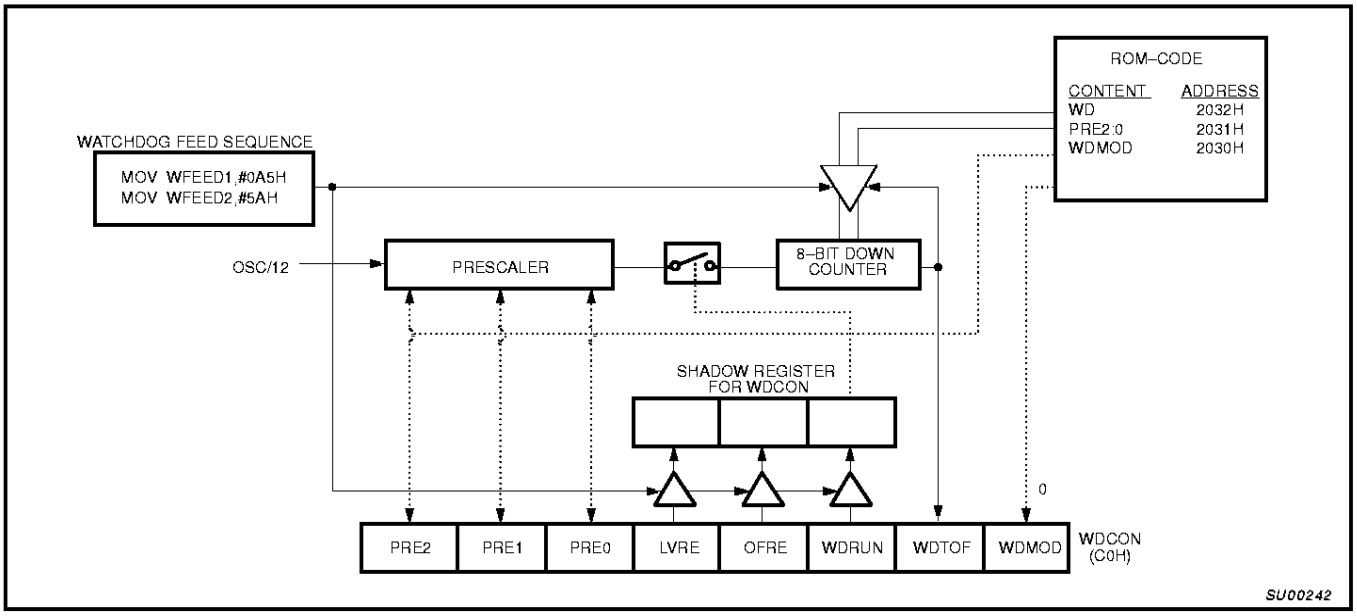

Figure 16. Watchdog Timer of 83C575 in Timer Mode (EA = 1, WDMOD = 0)

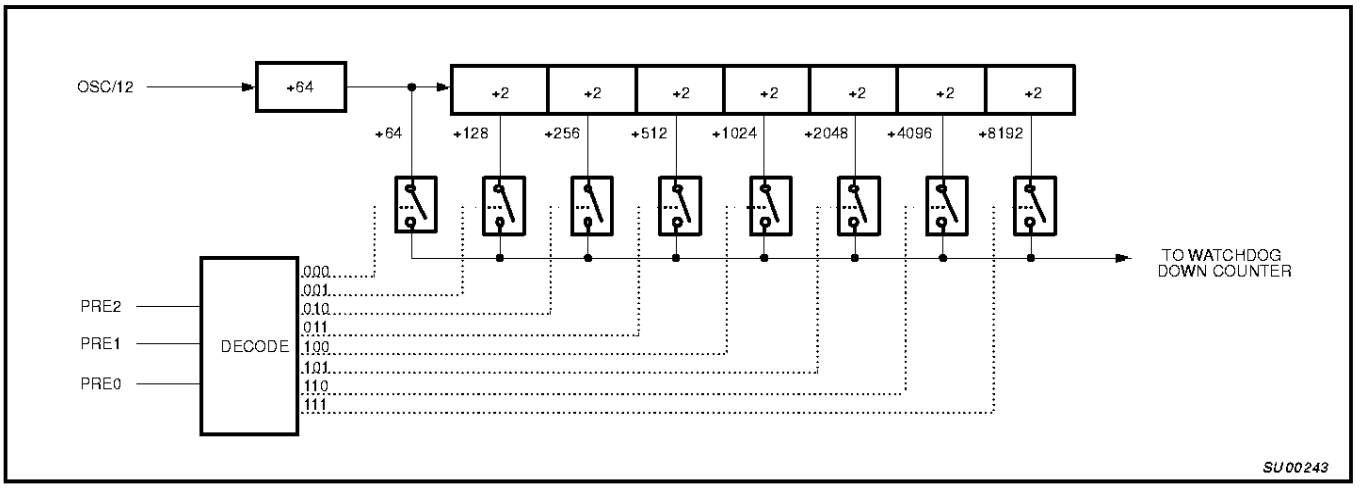

Figure 17. Watchdog Prescaler

SCON Address = 98H Reset Value = 0000 0000B

Bit Addressable

	SM0/FE	SM1	SM2	REN	TB8	RB8	TI	RI
Bit:	7	6	5	4	3	2	1	0
	(SMOD0 = 0/1)*							

Symbol	Function
FE	Framing Error bit. This bit is set by the receiver when an invalid stop bit is detected. The FE bit is not cleared by valid frames but should be cleared by software. The SMOD0 bit must be set to enable access to the FE bit.
SM0	Serial Port Mode Bit 0, (SMOD0 must = 0 to access bit SM0)
SM1	Serial Port Mode Bit 1

SM0	SM1	Mode	Description	Baud Rate**
0	0	0	shift register	$f_{osc}/12$
0	1	1	8-bit UART	variable
1	0	2	9-bit UART	$f_{osc}/64$ or $f_{osc}/32$
1	1	3	9-bit UART	variable

SM2	Enables the Automatic Address Recognition feature in Modes 2 or 3. If SM2 = **1** then RI will not be set unless the received 9th data bit (RB8) is **1**, indicating an address, and the received byte is a Given or Broadcast Address. In Mode **1**, if SM2 = **1** then RI will not be activated unless a valid stop bit was received, and the received byte is a Given or Broadcast Address. In Mode 0, SM2 should be 0.
REN	Enables serial reception. Set by software to enable reception. Clear by software to disable reception.
TB8	The 9th data bit that will be transmitted in Modes 2 and 3. Set or clear by software as desired.
RB8	In modes 2 and 3, the 9th data bit that was received. In Mode **1**, if SM2 = 0, RB8 is the stop bit that was received. In Mode 0, RB8 is not used.
TI	Transmit interrupt flag. Set by hardware at the end of the 8th bit time in Mode 0, or at the beginning of the stop bit in the other modes, in any serial transmission. Must be cleared by software.
RI	Receive interrupt flag. Set by hardware at the end of the 8th bit time in Mode 0, or halfway through the stop bit time in the other modes, in any serial reception (except see SM2). Must be cleared by software.

NOTE:
*SMOD0 is located at PCON6.
**f_{osc} = oscillator frequency

SU00043

Figure 18. SCON: Serial Port Control Register

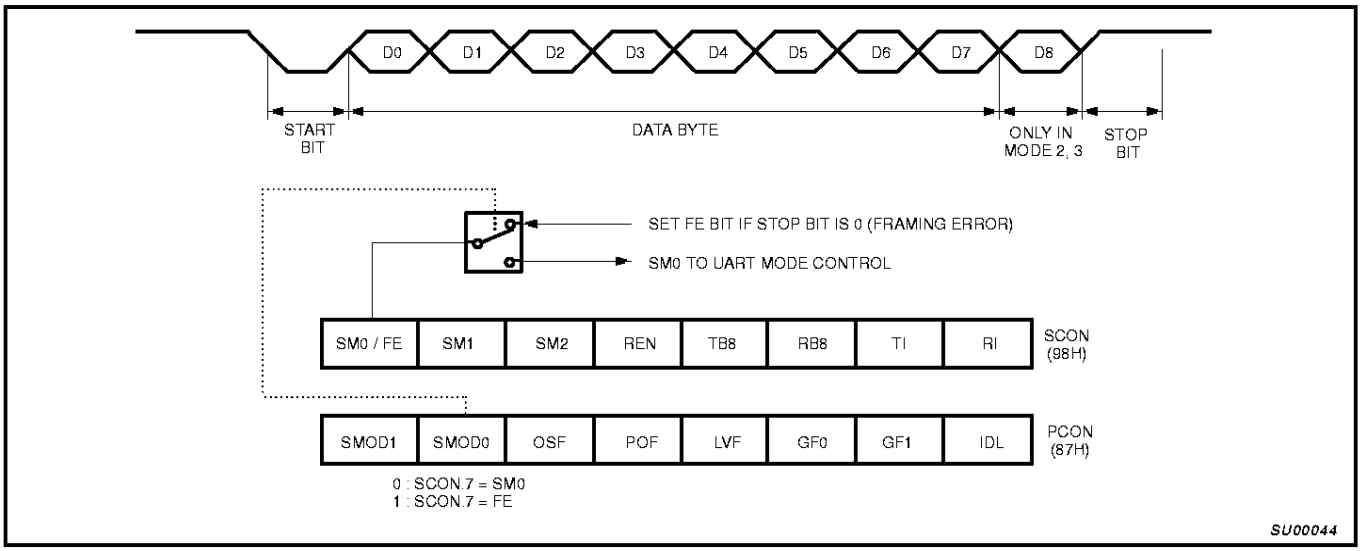

Figure 19. UART Framing Error Detection

Using the Automatic Address Recognition feature allows a master to selectively communicate with one or more slaves by invoking the Given slave address or addresses. All of the slaves may be contacted by using the Broadcast address. Two special Function Registers are used to define the slave's address, SADDR, and the address mask, SADEN. SADEN is used to define which bits in the SADDR are to b used and which bits are "don't care". The SADEN mask can be logically ANDed with the SADDR to create the "Given" address which the master will use for addressing each of the slaves. Use of the Given address allows multiple slaves to be recognized while excluding others. The following examples will help to show the versatility of this scheme:

Slave 0	SADDR	=	1100 0000
	SADEN	=	1111 1101
	Given	=	1100 00X0
Slave 1	SADDR	=	1100 0000
	SADEN	=	1111 1110
	Given	=	1100 000X

In the above example SADDR is the same and the SADEN data is used to differentiate between the two slaves. Slave 0 requires a 0 in bit 0 and it ignores bit 1. Slave 1 requires a 0 in bit 1 and bit 0 is ignored. A unique address for Slave 0 would be 1100 0010 since slave 1 requires a 0 in bit 1. A unique address for slave 1 would be 1100 0001 since a 1 in bit 0 will exclude slave 0. Both slaves can be selected at the same time by an address which has bit 0 = 0 (for slave 0) and bit 1 = 0 (for slave 1). Thus, both could be addressed with 1100 0000.

In a more complex system the following could be used to select slaves 1 and 2 while excluding slave 0:

Slave 0	SADDR	=	1100 0000
	SADEN	=	1111 1001
	Given	=	1100 0XX0
Slave 1	SADDR	=	1110 0000
	SADEN	=	1111 1010
	Given	=	1110 0X0X
Slave 2	SADDR	=	1110 0000
	SADEN	=	1111 1100
	Given	=	1110 00XX

In the above example the differentiation among the 3 slaves is in the lower 3 address bits. Slave 0 requires that bit 0 = 0 and it can be uniquely addressed by 1110 0110. Slave 1 requires that bit 1 = 0 and it can be uniquely addressed by 1110 and 0101. Slave 2 requires that bit 2 = 0 and its unique address is 1110 0011. To select Slaves 0 and 1 and exclude Slave 2 use address 1110 0100, since it is necessary t make bit 2 = 1 to exclude slave 2.

The Broadcast Address for each slave is created by taking the logical OR of SADDR and SADEN. Zeros in this result are treated as don't-cares. In most cases, interpreting the don't-cares as ones, the broadcast address will be FF hexadecimal.

Upon reset SADDR (SFR address 0A9H) and SADEN (SFR address 0B9H) are loaded with 0s. This produces a given address of all "don't cares" as well as a Broadcast address of all "don't cares". this effectively disables the Automatic Addressing mode and allows the microcontroller to use standard 80C51 type UART drivers which do not make use of this feature.

Analog Comparators

Four analog comparators are provided on chip. Three comparators have a common negative reference CMPR- and independent positive inputs CMP1+, CMP2+, CMP3+ on port 3. The fourth comparator has independent positive and negative inputs CMP0+ and CMP0- on port 1. The CMP register contains an output and enable bit for each comparator. The CMP register is bit addressable and is located at SFR address E8H. Figure 21 shows the connection of the comparators.

Pullups at the comparator input pins will be disabled by hardware when the comparator is enabled. In addition, to make inputs high impedance, the corresponding port SFR bits must be set by software to disable the pulldowns.

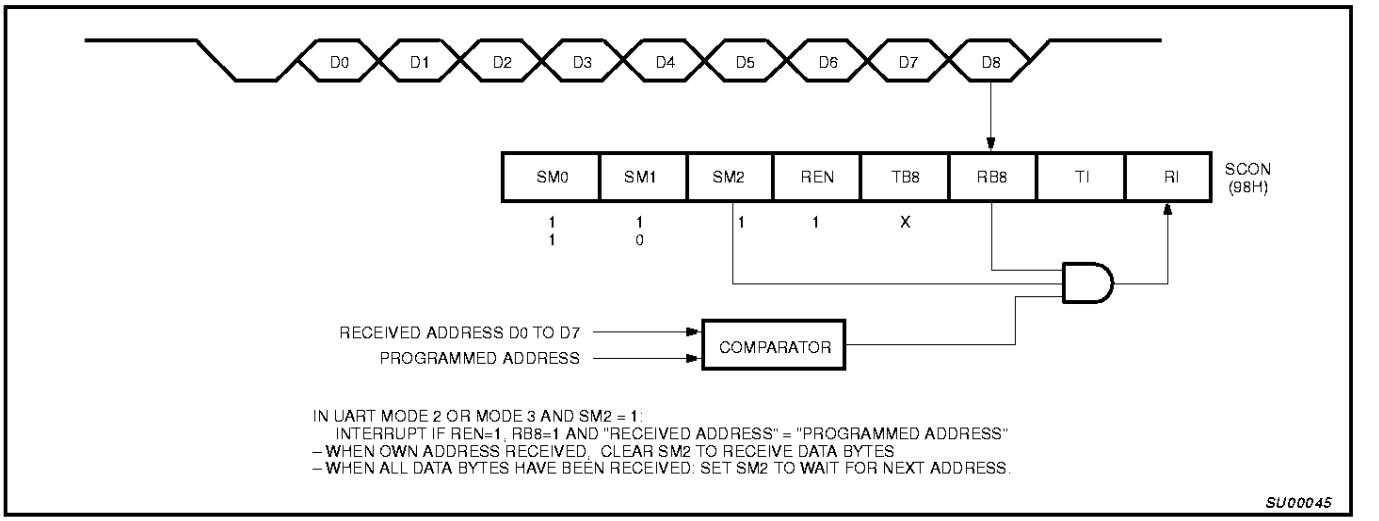

Figure 20. UART Multiprocessor Communication, Automatic Address Recognition

CMP Register Bit Definitions

CMP.7 enable comparator 3, disable pullups at P3.4, P3.7
CMP.6 enable comparator 2, disable pullups at P3.4, P3.6
CMP.5 enable comparator 1, disable pullups at P3.4, P3.5
CMP.4 enable comparator 0, disable pullups at P1.0, P1.1
CMP.3 comparator 3 output (read only)
CMP.2 comparator 2 output (read only)
CMP.1 comparator 1 output (read only)
CMP.0 comparator 0 output (read only)

All comparators are disabled automatically in power down mode, in idle mode unused comparators should be disabled by software to save power. A comparator can generate an interrupt that will terminate idle mode.

The CMPE register contains bits to enable each comparator to drive external output pins or internal PCA capture inputs. Pullups at the output pins are disabled by hardware when the external comparator output is enabled. The comparator output is wire-ORed with the corresponding port SFR bit, so the SFR bit must also be set by software to enable the output.

CMPE Register Bit Definitions

CMPE.7 enables comparator 3 to drive CEX3
CMPE.6 enables comparator 2 to drive CEX2
CMPE.5 enables comparator 1 to drive CEX1
CMPE.4 enables comparator 0 to drive CEX0
CMPE.3 enables comparator 3 output on P1.6 (open drain)
CMPE.2 enables comparator 2 output on P1.5 (open drain)
CMPE.1 enables comparator 1 output on P1.4 (open drain)
CMPE.0 enables comparator 0 output on P1.3 (open drain)

When 1s are written to CMPE bits 7-4, the comparator outputs will drive the corresponding capture input. (This function is not available in the idle or power-down mode.) When 1s are written to CMPE bits 3-0 the comparator output will also drive the corresponding port 1 pin. (This function is available in idle mode.) If the comparator's enabled to drive the capture input but not the port pin, then the port pin can be used for general purpose I/O. When a comparator output is enabled, pullups at the output pin are disabled and the output becomes open drain. The comparator output can be used to trigger a capture input in idle mode by programming the CMPE register to drive the pin from the comparator output to have the pin supply the capture trigger.

There are two special function registers associated with the comparators. They are CMP which contains the comparator enables and a bit that can be read by software to determine the state of each comparator's output, and CMPE which controls whether the output from each comparator drives the associated output pin or a capture input associated with one of the PCA modules.

The CMP registers bits 0–3 can be read by software to determine the state of the output of each comparator. To do this the associated comparator must be enabled but the output in port 1 can be disabled. This allows easy polling of the comparator output value without the need to use up a port pin.

The CMPE register allows the comparator to drive the associated PCA module capture input, so that on compare a capture can be generated in the PCA. Bits 0–3 of this register enable the comparator output to drive the associated port 1 output circuitry. Used as a comparator output this circuitry is open drain. To enable the comparator output to drive to port 1, the corresponding port bit must also be set to disable the pulldown. If the comparator is not enabled to drive the port 1 circuitry, the associated port 1 pin can be used for other I/O. This includes when a comparator is enabled to drive the capture input to a PCA module.

Reduced EMI Mode

There are two bits in the AUXR register that can be set to reduce the internal clock drive and disable the ALE output. AO (AUXR.0) when set turns off the ALE output. LO (AUXR.1) when set reduces the drive of the internal clock circuitry. Both bits are cleared on Reset. With LO set the 87C575 will still operate at 12MHz, but will have reduced EMI in the range above 100MHz.

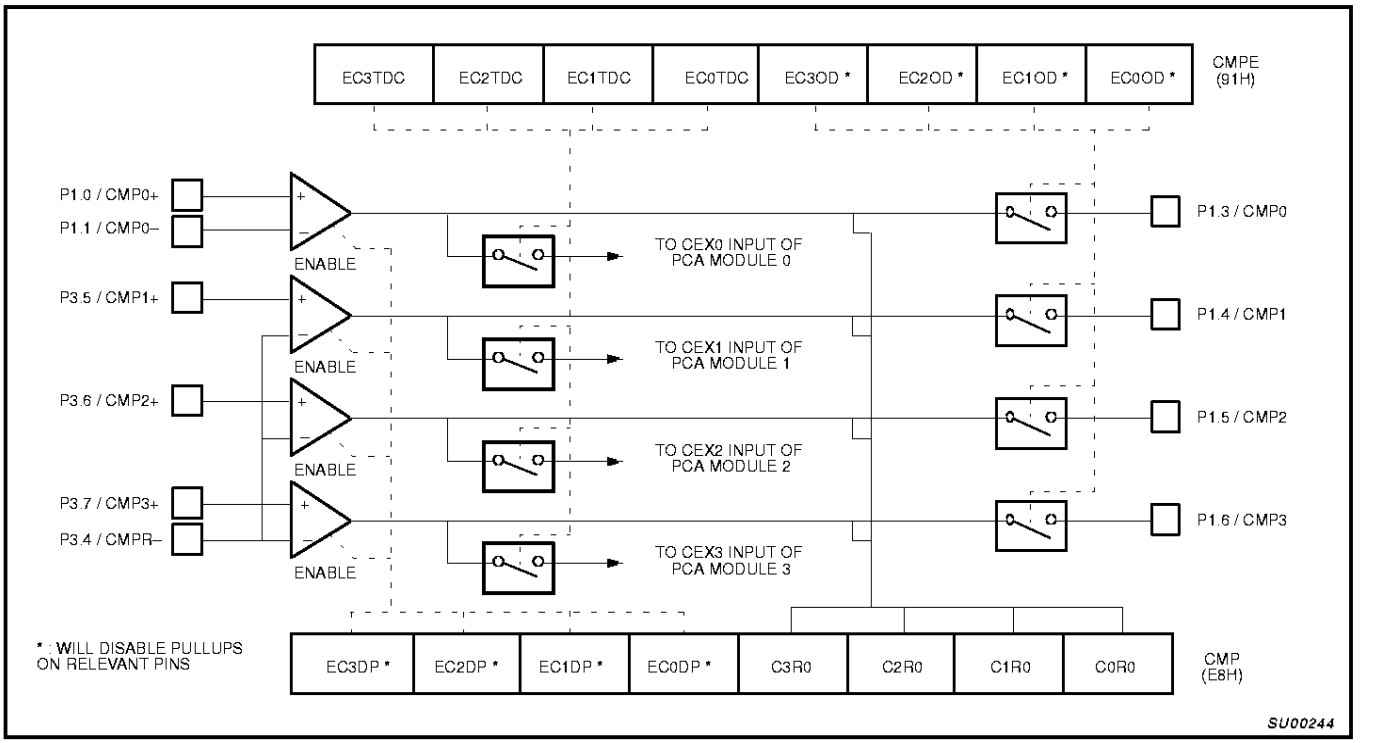

Figure 21. Analog Comparators

8XC575 Reduced EMI Mode

AUXR (0X8E)

--	--	--	--	--	--	LO	AO

AO: Turns off ALE output.

LO: Reduces drive of internal clock circuitry. 8XC575 spec'd to 12MHz when LO set.

INTERNAL RESET

Internal resets generated by the power on, low voltage, and oscillator fail detect circuits are self timed to guarantee proper initialization of the 8XC575. Reset will be held approximately 24 oscillator periods after normal conditions are detected by all enabled detect circuits. Internal resets do not drive $\overline{RST}$ but will cause missing pulses on ALE.

Interrupt Enable (IE) Register

EA	IE.7	enable all interrupts
EC	IE.6	enable PCA interrupt
ET2	IE.5	enable Timer 2 interrupt
ES	IE.4	enable Serial I/O interrupt
ET1	IE.3	enable Timer 1 interrupt
EX1	IE.2	enable External interrupt 1
ET0	IE.1	enable Timer 0 interrupt
EX0	IE.0	enable External interrupt 0

Interrupt Priority (IP) Register

	IP.7	reserved
PPC	IP.6	PCA interrupt priority
PT2	IP.5	Timer 2 interrupt priority
PS	IP.4	Serial I/O interrupt priority
PT1	IP.3	Timer 1 interrupt priority
PX1	IP.2	External interrupt 1 priority
PT0	IP.1	Timer 0 interrupt priority
PX0	IP.0	External interrupt 0 priority

Priority	Source	Flag	Vector
1	INT0	IE0	03H highest priority
2	Timer 0	TF0	0BH
3	INT1	IE1	13H
4	Timer 1	TF1	1BH
5	PCA	CF,CCFn	33H
6	Serial I/O	RI,TI	23H
7	Timer 2	TF2/EXF2	2BH lowest priority

Power Control (PCON) Register

SMOD1	PCON.7	double baud rate bit
SMOD0	PCON.6	SCON.7 access control
OSF	PCON.5	oscillator fail flag
POF	PCON.4	power off flag
LVF	PCON.3	low voltage flag
GF0	PCON.2	general purpose flag
PD	PCON.1	power down mode bit
IDL	PCON.0	idle mode bit

Auxiliary Register Bit Definitions (AUXR = 8EH)

AO	AUXR.0	ALE Off, when set turns off ALE
LO	AUXR.1	Low Speed, reduces internal clock drive

Port 2 Pullup Disable Register (P2OD = 0A1H)

Port 2 pullups can be disabled by writing ones to P2OD. Each bit in P2OD controls the corresponding bit in P2. P2OD resets to all zeros enabling Port 2 pullups. Writing one to a P2OD bit disables pullups at the corresponding port 2 bit making the output open drain.

OSCILLATOR CHARACTERISTICS

XTAL1 and XTAL2 are the input and output, respectively, of an inverting amplifier. The pins can be configured for use as an on-chip oscillator, as shown in the Logic Symbol, page 3.

To drive the device from an external clock source, XTAL1 should be driven while XTAL2 is left unconnected. There are no requirements on the duty cycle of the external clock signal, because the input to the internal clock circuitry is through a divide-by-two flip-flop. However, minimum and maximum high and low times specified in the data sheet must be observed.

IDLE MODE

In idle mode, the CPU puts itself to sleep while all of the on-chip peripherals stay active. The instruction to invoke the idle mode is the last instruction executed in the normal operating mode before the idle mode is activated. The CPU contents, the on-chip RAM, and all of the special function registers remain intact during this mode. The idle mode can be terminated either by any enabled interrupt (at which time the process is picked up at the interrupt service routine and continued), or by a hardware reset which starts the processor in the same manner as a power-on reset.

POWER-DOWN MODE

In the power-down mode, the oscillator is stopped and the instruction to invoke power-down is the last instruction executed. Only the contents of the on-chip RAM are preserved. The control bits for the reduced power modes are in the special function register PCON. Power-down mode can be terminated with either a hardware reset or external interrupt. With an external interrupt $\overline{INT0}$ or $\overline{INT1}$ must be enabled and configured as level sensitive. Holding the pin low restarts to oscillator and bringing the pin back high completes the exit.

If the watchdog is enabled (WDRUN = 1), then power-down mode is disabled.

DESIGN CONSIDERATIONS

At power-on, the voltage on V_{CC} must come up with $\overline{RST}$ low for a proper start-up.

Table 2 shows the state of I/O ports during low current operating modes.

Table 2. External Pin Status During Idle and Power-Down Modes

MODE	PROGRAM MEMORY	ALE	$\overline{PSEN}$	PORT 0	PORT 1	PORT 2	PORT 3
Idle	Internal	1	1	Data	Data	Data	Data
Idle	External	1	1	Float	Data	Address	Data
Power-down	Internal	0	0	Data	Data	Data	Data
Power-down	External	0	0	Float	Data	Data	Data

ROM CODE SUBMISSION

When submitting ROM code for the 83C575, the following must be specified:

1. 8k byte user ROM data
2. 32 byte ROM encryption key
3. ROM security bits
4. The watchdog timer parameters.

ADDRESS	CONTENT	BIT(S)	COMMENT
0000H to 1FFFH	DATA	7:0	User ROM Data
2000H to 201FH	KEY	7:0	ROM Encryption Key FFH = no encryption
2020H	Reserved Security Bit 2 Security Bit 1	2 1 0	Must = 1 0 = enable, 1 = disable 0 = enable, 1 = disable
2030H	Reserved	7:0	Must = FFH
2031H	Reserved	7:0	Must = FFH
2032H	WDL [1]	7:0	Watchdog reload value (see specification)
2033H	WDCON [1]	7:5	PRE2:0
2033H	WDCON [1]	4	LVRE
2033H	WDCON [1]	3	OFRE
2033H	WDCON [1]	2	WDRUN=0, not ROM coded
2033H	WDCON [1]	1	WDTOF=0, not ROM coded
2033H	WDCON [1]	0	WDMOD

NOTES:

1. See Watchdog Timer Specification for definition of WDL and WDCON bits.

Security Bit 1: When programmed, this bit has two effects on masked ROM parts:

1. External MOVC is disabled, and
2. EA# is latched on Reset.

Security Bit 2: When programmed, this bit inhibits Verify User ROM.

ABSOLUTE MAXIMUM RATINGS[1, 2, 3]

PARAMETER	RATING	UNIT
Operating temperature under bias	–55 to +125	°C
Storage temperature range	–65 to +150	°C
Voltage on $\overline{EA}/V_{PP}$ pin to V_{SS}	0 to +13.0	V
Voltage on any other pin to V_{SS}	–0.5 to +6.5	V
Maximum I_{OL} per I/O pin	15	mA
Power dissipation (based on package heat transfer limitations, not device power consumption)	1.5	W

NOTES:

1. Stresses above those listed under Absolute Maximum Ratings may cause permanent damage to the device. This is a stress rating only and functional operation of the device at these or any conditions other than those described in the AC and DC Electrical Characteristics section of this specification is not implied.
2. This product includes circuitry specifically designed for the protection of its internal devices from the damaging effects of excessive static charge. Nonetheless, it is suggested that conventional precautions be taken to avoid applying greater than the rated maxima.
3. Parameters are valid over operating temperature range unless otherwise specified. All voltages are with respect to V_{SS} unless otherwise noted.

DC ELECTRICAL CHARACTERISTICS

T_{amb} = 0°C to +70°C and –40°C to +125°C, V_{CC} = 5V ±10%, V_{SS} = 0V

SYMBOL	PARAMETER	TEST CONDITIONS	LIMITS MIN	LIMITS TYP[1]	LIMITS MAX	UNIT
V_{IL}	Input low voltage (Ports 0, 2, 3, except 3.2, 3.3)		–0.5		$0.5V_{CC}$–0.6	V
V_{IL1}	Input low voltage (Ports 1, 3.2, 3.3)		–0.5		$0.65V_{CC}$–0.5	V
V_{IL2}	Input low voltage ($\overline{EA}$)		0		$0.2V_{CC}$–0.45	V
V_{IL3}	Input low voltage (XTAL1, RST)		–0.5		$0.2V_{CC}$–0.1	V
V_{IH}	Input high voltage (Ports 0, 2, 3, except 3.2, 3.3)		$0.5V_{CC}$+0.8		V_{CC}+0.5	V
V_{IH1}	Input high voltage (Ports 1, 3.2, 3.3)		$0.8V_{CC}$+0.3		V_{CC}+0.5	V
V_{IH2}	Input high voltage ($\overline{EA}$)		$0.2V_{CC}$+0.9		V_{CC}+0.5	V
V_{IH3}	Input high voltage (XTAL1, RST)		$0.7V_{CC}$		V_{CC}+0.5	V
HYS	Hysteresis (Ports 0, 2, 3, except 3.2, 3.3)		200			mV
HYS1	Hysteresis (Ports 1, 3.2, 3.3)		50			mV
V_{OL}	Output voltage low (Ports 1, 2, 3, except 3.1)	I_{OL} = 1.6mA			0.45	V
V_{OL1}	Output voltage low (Ports 0, ALE, $\overline{PSEN}$)	I_{OL} = 3.2mA			0.45	V
V_{OL2}	Output voltage low P3.1 with bit cleared P3.1 with bit set	 I_{OL} = 10.0mA I_{OL} = 1.6mA			 0.50 0.45	 V V
V_{OH}	Output voltage high (Ports 1, 2, 3, except P3.1)	I_{OH} = –30µA	V_{CC}–0.7			V
V_{OH1}	Output voltage high (Port 0 in external bus mode, ALE, $\overline{PSEN}$)	I_{OH} = –3.2mA	V_{CC}–0.7			V
V_{OH2}	Output voltage high P3.1 with bit cleared P3.1 with bit set	 I_{OH} = –10.0mA I_{OH} = –1.6mA	 V_{CC}–1.5 V_{CC}–1.5			 V V
V_{IO}	Offset voltage comparator inputs		–35		+35	mV
V_{CR}	Common mode range comparator inputs		0		V_{CC}	V
I_{IL}	Logical 0 input current (Ports 1, 2, 3, except 3.1)	V_{IN} = 0.45V			–75	µA
I_{TL}	Logical 1-to-0 transition current (Ports 2, 3, except 3.1, 3.2, 3.3)[4]	See Note 4			–600	µA
I_{TL1}	Logical 1-to-0 transition current (Ports 1, 3.2, 3.3)	See Note 4			–450	µA
I_{L1}	Input leakage current (Port 0, Port2 in open drain mode)[9]	0.45 < V_{IN} < V_{CC}	2		40	µA
I_{L2}	Input leakage current ($\overline{EA}$, P3.1)	0.45 < V_{IN} < V_{CC}	–10		+10	µA
I_{LC}	Input leakage current comparator inputs	0 < V_{IN} < V_{CC}	–1.0		+1.0	µA
I_{CC}	Power supply current:[7] Active mode @ 16MHz[5] Idle mode @ 16MHz Power-down mode	See note 6		 20 8 5	 30 12 75	 mA mA µA
R_{RST}	Internal reset pull-up resistor	V_{IN} = 0V	50		200	kΩ
V_{LOW}	Low V_{CC} detect voltage		4.0		4.45	V
C_{IO}	Pin capacitance[10]	f = 1MHz			10	pF

NOTES: (SEE NEXT PAGE)

NOTES TO THE DC ELECTRICAL CHARACTERISTICS TABLE:

1. Typical ratings are not guaranteed. The values listed are at room temperature, 5V.
2. Capacitive loading on ports 0 and 2 may cause spurious noise to be superimposed on the V_{OL}s of ALE and ports 1 and 3. The noise is due to external bus capacitance discharging into the port 0 and port 2 pins when these pins make 1-to-0 transitions during bus operations. In the worst cases (capacitive loading > 100pF), the noise pulse on the ALE pin may exceed 0.8V. In such cases, it may be desirable to qualify ALE with a Schmitt Trigger, or use an address latch with a Schmitt Trigger STROBE input. I_{OL} can exceed these conditions provided that no single output sinks more than 5mA and no more than two outputs exceed the test conditions.
3. Capacitive loading on ports 0 and 2 may cause the V_{OH} on ALE and $\overline{PSEN}$ to momentarily fall below the $0.9V_{CC}$ specification when the address bits are stabilizing.
4. Pins of ports 1, 2 and 3 source a transition current when they are being externally driven from 1 to 0. The transition current reaches its maximum value when V_{IN} is between V_{IH} and V_{IL}.
5. I_{CC}MAX at other frequencies can be determined from Figure 29.
6. See Figures 30 through 33 for I_{CC} test conditions.
7. Load capacitance for port 0, ALE, and $\overline{PSEN}$ = 100pF, load capacitance for all other outputs = 80pF.
8. Under steady state (non-transient) conditions, I_{OL} must be externally limited as follows:
   Maximum I_{OL} per port pin: 10mA
   Maximum I_{OL} per 8-bit port: 26mA
   Maximum total I_{OL} for all outputs: 71mA
   If I_{OL} exceeds the test condition, V_{OL} may exceed the related specification. Pins are not guaranteed to sink current greater than the listed test conditions.
9. Specification applies to Port 2 when P2OD bit is set.
10. 15pF MAX for the $\overline{EA}/V_{PP}$ and P0.0 pins.

AC ELECTRICAL CHARACTERISTICS

T_{amb} = 0°C to +70°C and –40°C to +125°C, V_{CC} = 5V ±10%, V_{SS} = 0V[1, 2]

SYMBOL	FIGURE	PARAMETER	VARIABLE CLOCK		UNIT
			MIN	MAX	
$1/t_{CLCL}$	22	Oscillator frequency: **Speed Versions** 8XC575 E	6	16	MHz
OSCF		Oscillator fail detect frequency	0.6	5.5	MHz
TR		Comparator response time		10	µs
t_{LHLL}	22	ALE pulse width	$2t_{CLCL}$–40		ns
t_{AVLL}	22	Address valid to ALE low	t_{CLCL}–25		ns
t_{LLAX}	22	Address hold after ALE low	t_{CLCL}–25		ns
t_{LLIV}	22	ALE low to valid instruction in		$4t_{CLCL}$–75	ns
t_{LLPL}	22	ALE low to $\overline{PSEN}$ low	t_{CLCL}–25		ns
t_{PLPH}	22	$\overline{PSEN}$ pulse width	$3t_{CLCL}$–45		ns
t_{PLIV}	22	$\overline{PSEN}$ low to valid instruction in		$3t_{CLCL}$–70	ns
t_{PXIX}	22	Input instruction hold after $\overline{PSEN}$	0		ns
t_{PXIZ}	22	Input instruction float after $\overline{PSEN}$		t_{CLCL}–25	ns
t_{AVIV}	22	Address to valid instruction in		$5t_{CLCL}$–85	ns
t_{PLAZ}	22	$\overline{PSEN}$ low to address float		10	ns
Data Memory					
t_{RLRH}	23, 24	$\overline{RD}$ pulse width	$6t_{CLCL}$–100		ns
t_{WLWH}	23, 24	$\overline{WR}$ pulse width	$6t_{CLCL}$–100		ns
t_{RLDV}	23, 24	$\overline{RD}$ low to valid data in		$5t_{CLCL}$–110	ns
t_{RHDX}	23, 24	Data hold after $\overline{RD}$	0		ns
t_{RHDZ}	23, 24	Data float after $\overline{RD}$		$2t_{CLCL}$–28	ns
t_{LLDV}	23, 24	ALE low to valid data in		$8t_{CLCL}$–150	ns
t_{AVDV}	23, 24	Address to valid data in		$9t_{CLCL}$–165	ns
t_{LLWL}	23, 24	ALE low to $\overline{RD}$ or $\overline{WR}$ low	$3t_{CLCL}$–50	$3t_{CLCL}$+50	ns
t_{AVWL}	23, 24	Address valid to $\overline{WR}$ low or $\overline{RD}$ low	$4t_{CLCL}$–75		ns
t_{QVWX}	23, 24	Data valid to $\overline{WR}$ transition	t_{CLCL}–30		ns
t_{WHQX}	23, 24	Data hold after $\overline{WR}$	t_{CLCL}–25		ns
t_{RLAZ}	23, 24	$\overline{RD}$ low to address float		0	ns
t_{WHLH}	23, 24	$\overline{RD}$ or $\overline{WR}$ high to ALE high	t_{CLCL}–25	t_{CLCL}+25	ns
External Clock					
t_{CHCX}	26	High time	12		ns
t_{CLCX}	26	Low time	12		ns
t_{CLCH}	26	Rise time		20	ns
t_{CHCL}	26	Fall time		20	ns
Shift Register					
t_{XLXL}	25	Serial port clock cycle time	$12t_{CLCL}$		ns
t_{QVXH}	25	Output data setup to clock rising edge	$10t_{CLCL}$–133		ns
t_{XHQX}	25	Output data hold after clock rising edge	$2t_{CLCL}$–60		ns
t_{XHDX}	25	Input data hold after clock rising edge	0		ns
t_{XHDV}	25	Clock rising edge to input data valid		$10t_{CLCL}$–133	ns

NOTES:
1. Parameters are valid over operating temperature range unless otherwise specified.
2. Load capacitance for port 0, ALE, and $\overline{PSEN}$ = 100pF, load capacitance for all other outputs = 80pF.
3. Interfacing the 80C32/52 to devices with float times up to 45ns is permitted. This limited bus contention will not cause damage to Port 0 drivers.

EXPLANATION OF THE AC SYMBOLS

Each timing symbol has five characters. The first character is always 't' (= time). The other characters, depending on their positions, indicate the name of a signal or the logical status of that signal. The designations are:

A – Address
C – Clock
D – Input data
H – Logic level high
I – Instruction (program memory contents)
L – Logic level low, or ALE
P – $\overline{PSEN}$
Q – Output data
R – $\overline{RD}$ signal
t – Time
V – Valid
W – $\overline{WR}$ signal
X – No longer a valid logic level
Z – Float

Examples: t_{AVLL} = Time for address valid to ALE low.
t_{LLPL} = Time for ALE low to $\overline{PSEN}$ low.

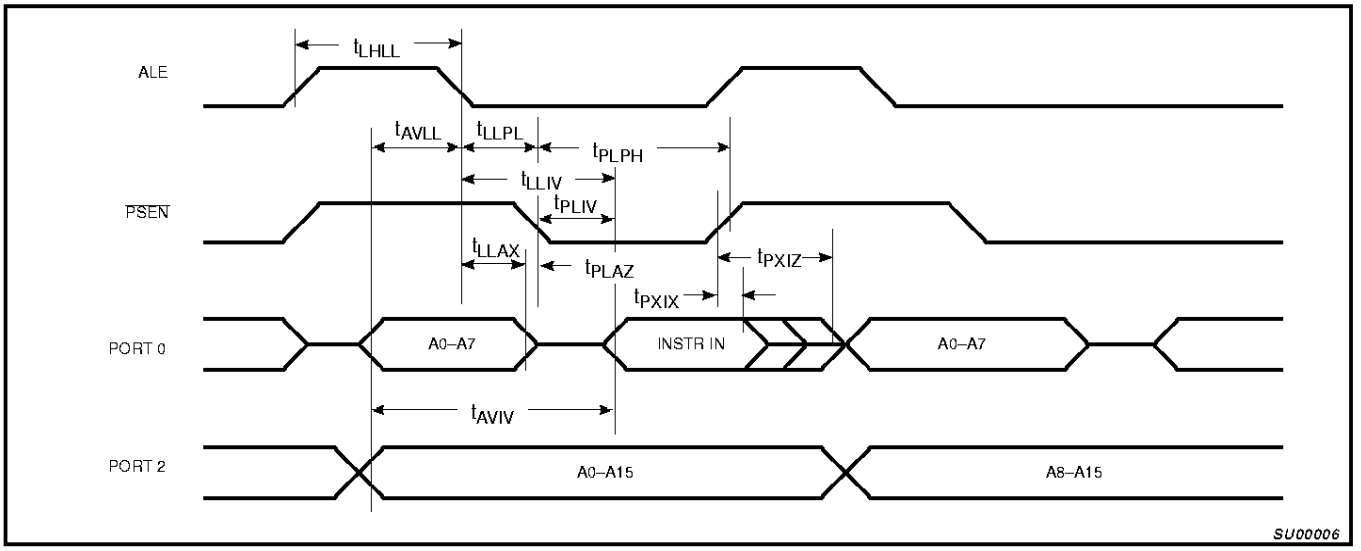

Figure 22. External Program Memory Read Cycle

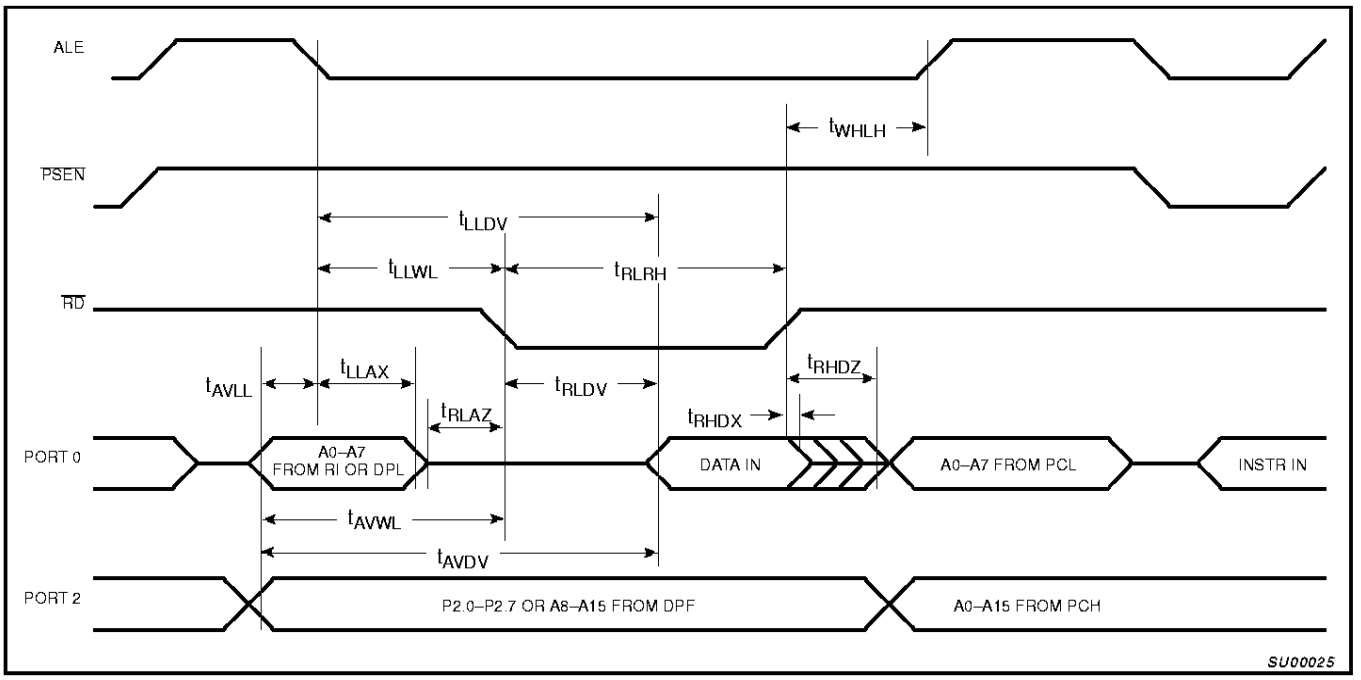

Figure 23. External Data Memory Read Cycle

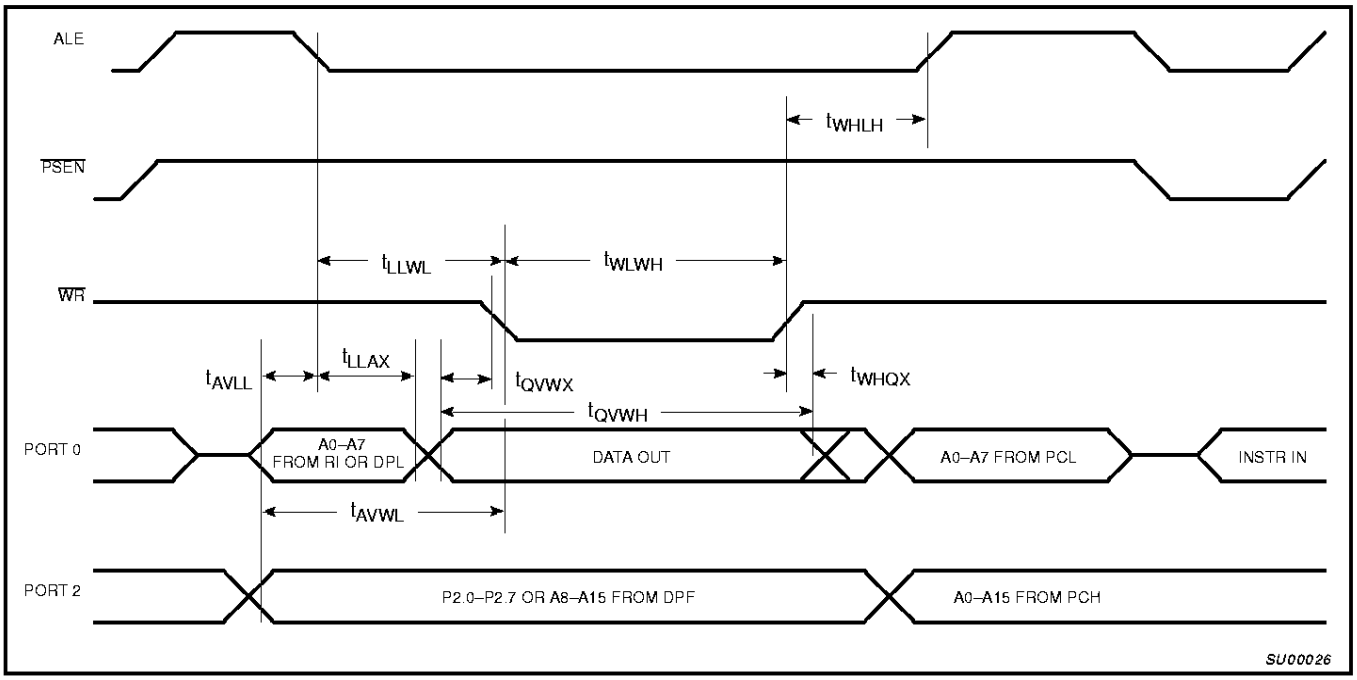

Figure 24. External Data Memory Write Cycle

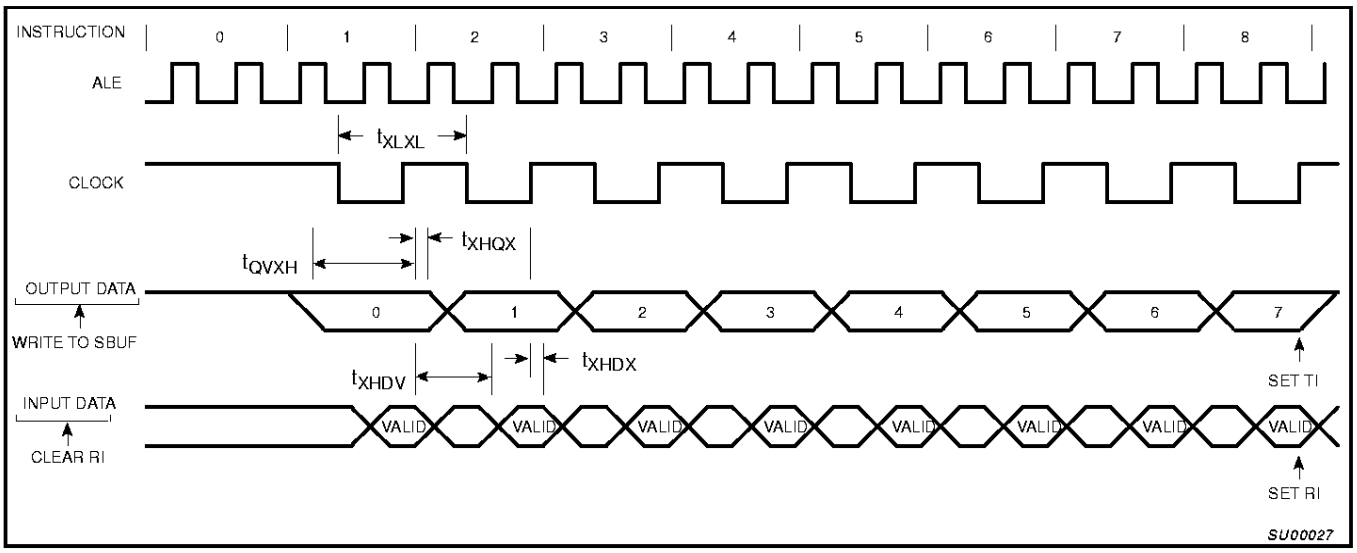

Figure 25. Shift Register Mode Timing

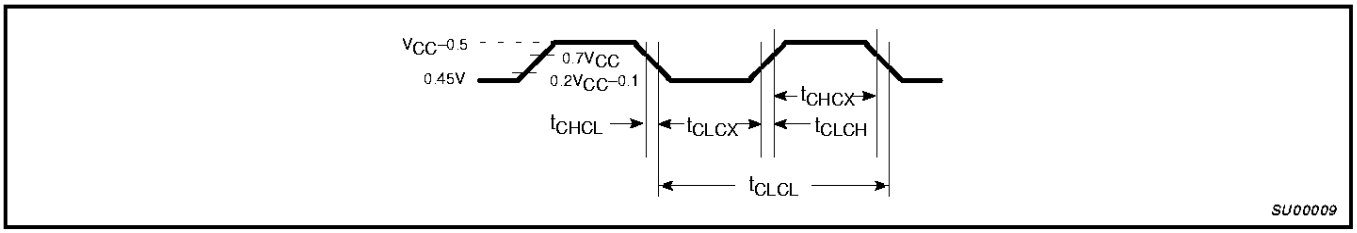

Figure 26. External Clock Drive

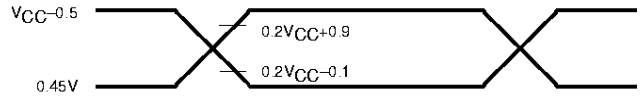

NOTE:
AC inputs during testing are driven at V_{CC} –0.5 for a logic '1' and 0.45V for a logic '0'.
Timing measurements are made at V_{IH} min for a logic '1' and V_{IL} max for a logic '0'.

SU00010

Figure 27. AC Testing Input/Output

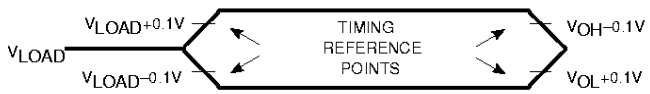

NOTE:
For timing purposes, a port is no longer floating when a 100mV change from load voltage occurs, and begins to float when a 100mV change from the loaded V_{OH}/V_{OL} level occurs. $I_{OH}/I_{OL} \geq \pm 20$mA.

SU00011

Figure 28. Float Waveform

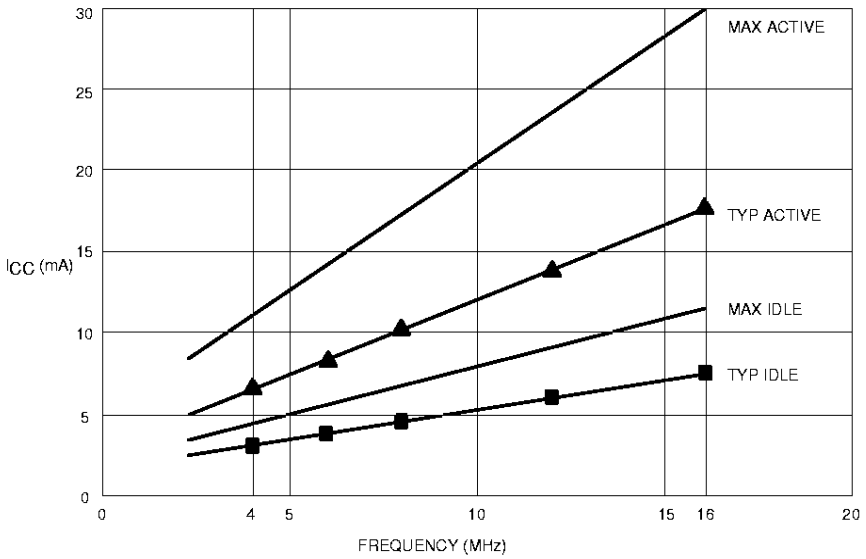

SU00245

Figure 29. I_{CC} vs. FREQ
Valid only within frequency specifications of the device under test

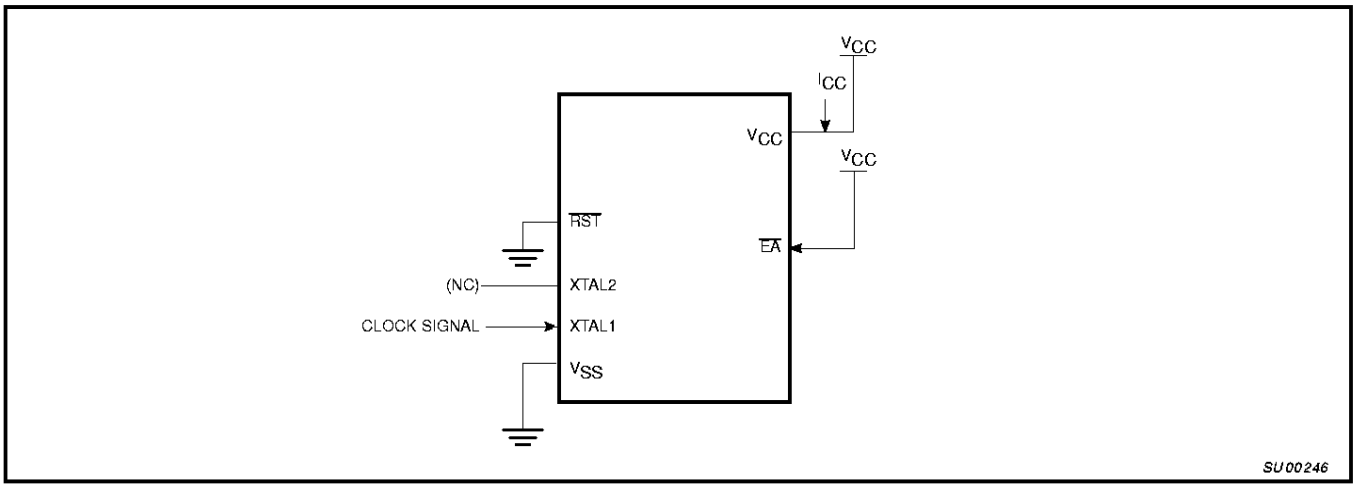

Figure 30. I_{CC} Test Condition, Active Mode
All other pins are disconnected

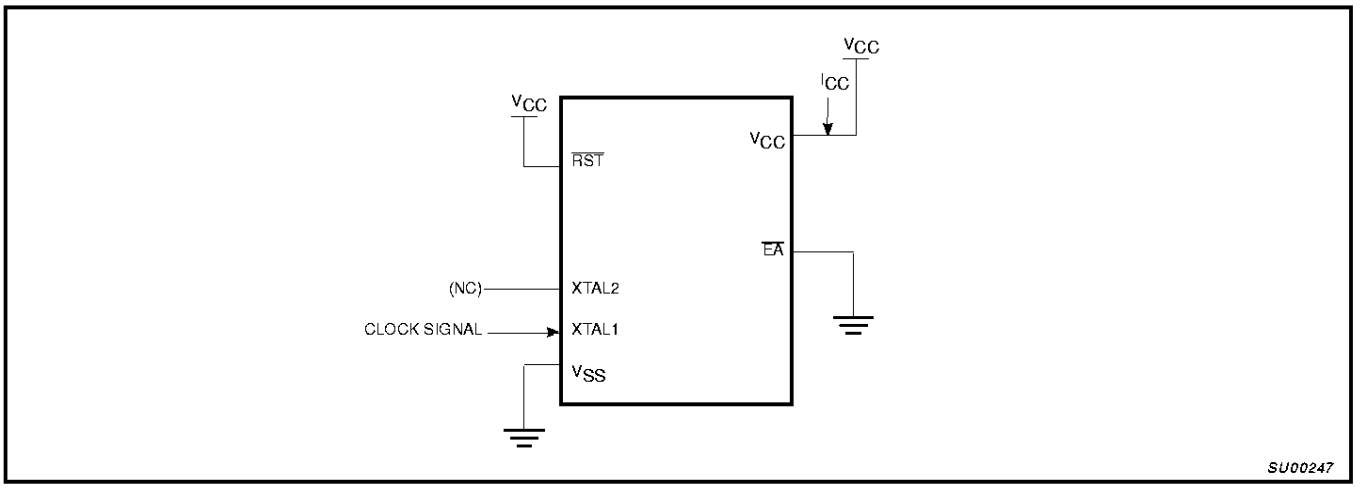

Figure 31. I_{CC} Test Condition, Idle Mode
All other pins are disconnected

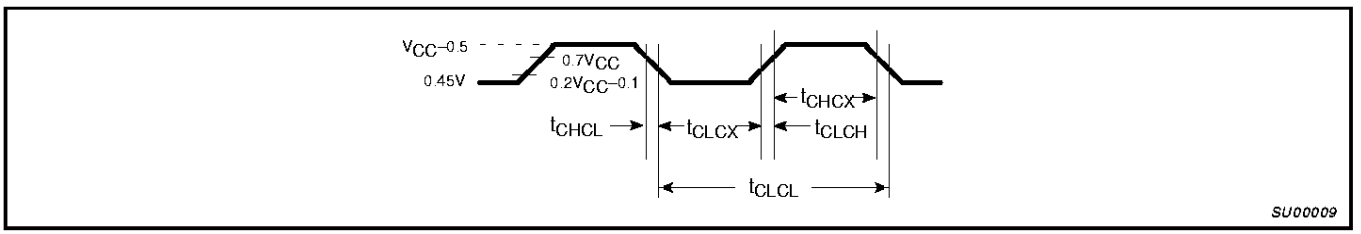

Figure 32. Clock Signal Waveform for I_{CC} Tests in Active and Idle Modes
t_{CLCH} = t_{CHCL} = 5ns

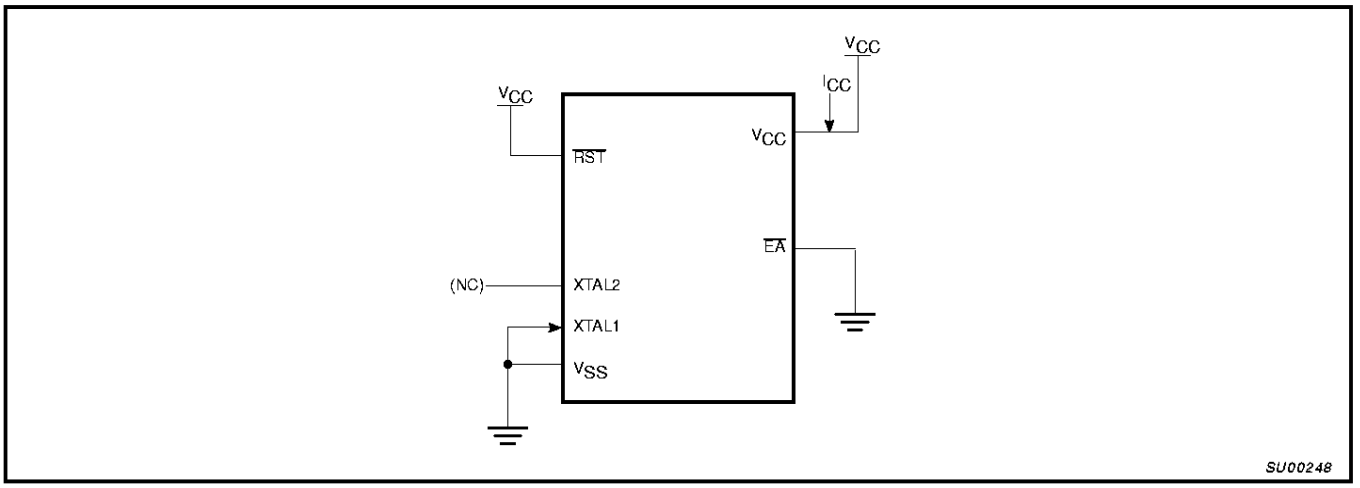

Figure 33. I_{CC} Test Condition, Power Down Mode
All other pins are disconnected. V_{CC} = 2V to 5.5V

EPROM CHARACTERISTICS

To put the 87C575 in the EPROM programming mode, PSEN must be held high during power up, then driven low with reset active. The 87C575 is programmed by using a modified Quick-Pulse Programming™ algorithm. It differs from older methods in the value used for V_{PP} (programming supply voltage) and in the width and number of the ALE/$\overline{PROG}$ pulses.

The 87C575 contains two signature bytes that can be read and used by an EPROM programming system to identify the device. The signature bytes identify the device as an 87C575 manufactured by Philips.

Table 3 shows the logic levels for reading the signature byte, and for programming the program memory, the encryption table, and the security bits. The circuit configuration and waveforms for quick-pulse programming are shown in Figures 34 and 35. Figure 36 shows the circuit configuration for normal program memory verification.

Quick-Pulse Programming

The setup for microcontroller quick-pulse programming is shown in Figure 34. Note that the 87C575 is running with a 4 to 6MHz oscillator. The reason the oscillator needs to be running is that the device is executing internal address and program data transfers.

The address of the EPROM location to be programmed is applied to ports 1 and 2, as shown in Figure 34. The code byte to be programmed into that location is applied to port 0. RST, $\overline{PSEN}$ and pins of ports 2 and 3 specified in Table 3 are held at the 'Program Code Data' levels indicated in Table 3. The ALE/$\overline{PROG}$ is pulsed low 25 times as shown in Figure 35.

To program the encryption table, repeat the 25 pulse programming sequence for addresses 0 through 1FH, using the 'Pgm Encryption Table' levels. Do not forget that after the encryption table is programmed, verification cycles will produce only encrypted data.

To program the security bits, repeat the 25 pulse programming sequence using the 'Pgm Security Bit' levels. After one security bit is programmed, further programming of the code memory and encryption table is disabled. However, the other security bit can still be programmed.

Note that the $\overline{EA}$/V_{PP} pin must not be allowed to go above the maximum specified V_{PP} level for any amount of time. Even a narrow glitch above that voltage can cause permanent damage to the device. The V_{PP} source should be well regulated and free of glitches and overshoot.

Program Verification

If security bit 2 has not been programmed, the on-chip program memory can be read out for program verification. The address of the program memory locations to be read is applied to ports 1 and 2 as shown in Figure 36. The other pins are held at the 'Verify Code Data' levels indicated in Table 3. The contents of the address location will be emitted on port 0. External pull-ups are required on port 0 for this operation.

If the encryption table has been programmed, the data presented at port 0 will be the exclusive NOR of the program byte with one of the encryption bytes. The user will have to know the encryption table contents in order to correctly decode the verification data. The encryption table itself cannot be read out.

Reading the Signature Bytes

The signature bytes are read by the same procedure as a normal verification of locations 030H and 031H, except that P3.6 and P3.7 need to be pulled to a logic low. The values are:

(030H) = 15H indicates manufactured by Philips
(B0H) = 97H indicates 87C575

Program/Verify Algorithms

Any algorithm in agreement with the conditions listed in Table 3, and which satisfies the timing specifications, is suitable.

Erasure Characteristics

Erasure of the EPROM begins to occur when the chip is exposed to light with wavelengths shorter than approximately 4,000 angstroms. Since sunlight and fluorescent lighting have wavelengths in this range, exposure to these light sources over an extended time (about 1 week in sunlight, or 3 years in room level fluorescent lighting) could cause inadvertent erasure. **For this and secondary effects, it is recommended that an opaque label be placed over the window.** For elevated temperature or environments where solvents are being used, apply Kapton tape Fluorglas part number 2345–5, or equivalent.

The recommended erasure procedure is exposure to ultraviolet light (at 2537 angstroms) to an integrated dose of at least 15W-s/cm^2. Exposing the EPROM to an ultraviolet lamp of 12,000µW/cm^2 rating for 20 to 39 minutes, at a distance of about 1 inch, should be sufficient.

Erasure leaves the array in an all 1s state.

Table 3. EPROM Programming Modes

MODE	RST	$\overline{PSEN}$	ALE/$\overline{PROG}$	$\overline{EA}$/V_{PP}	P2.7	P2.6	P3.7	P3.6
Read signature	0	0	1	1	0	0	0	0
Program code data	0	0	0*	V_{PP}	1	0	1	1
Verify code data	0	0	1	1	0	0	1	1
Pgm encryption table	0	0	0*	V_{PP}	1	0	1	0
Pgm security bit 1	0	0	0*	V_{PP}	1	1	1	1
Pgm security bit 2	0	0	0*	V_{PP}	1	1	0	0

NOTES:
1. '0' = Valid low for that pin, '1' = valid high for that pin.
2. V_{PP} = 12.75V ±0.25V.
3. V_{CC} = 5V±10% during programming and verification.

* ALE/$\overline{PROG}$ receives 25 programming pulses while V_{PP} is held at 12.75V. Each programming pulse is low for 100µs (±10µs) and high for a minimum of 10µs.

™Trademark phrase of Intel Corporation.

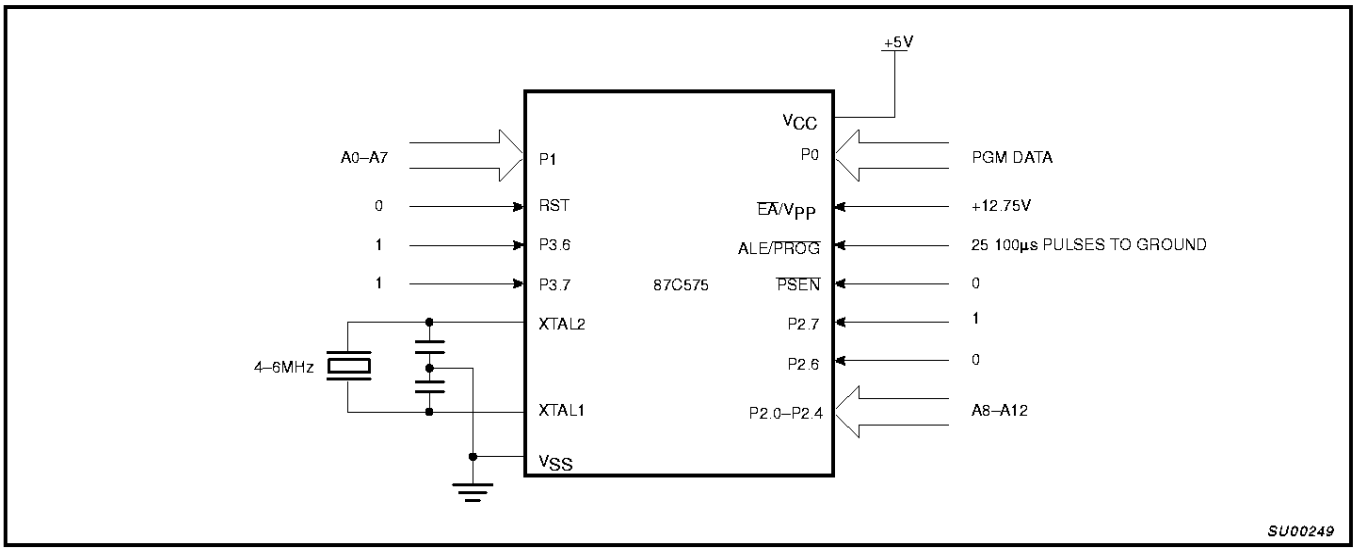

Figure 34. Programming Configuration

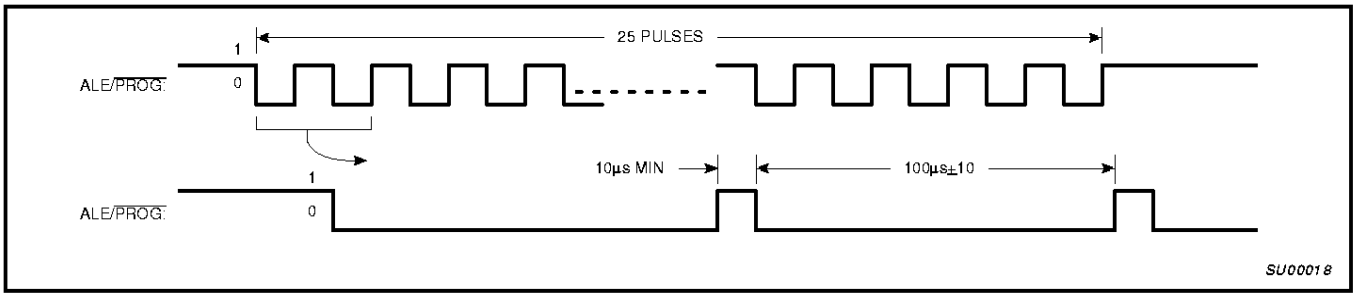

Figure 35. $\overline{\text{PROG}}$ Waveform

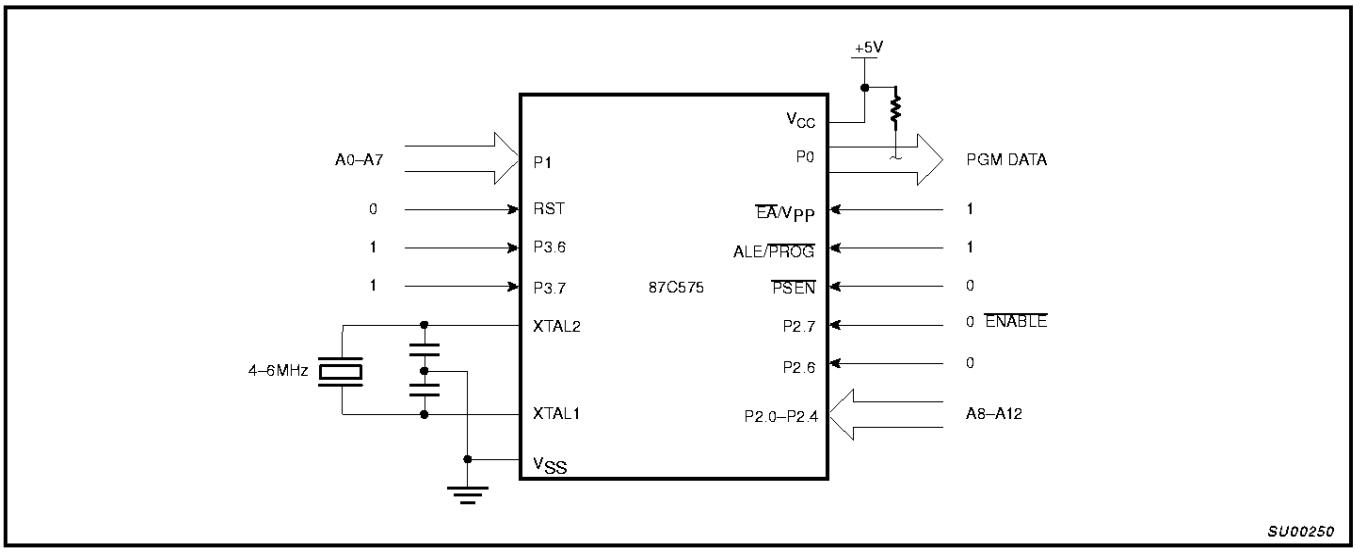

Figure 36. Program Verification

EPROM PROGRAMMING AND VERIFICATION CHARACTERISTICS

T_{amb} = 21°C to +27°C, V_{CC} = 5V±10%, V_{SS} = 0V (See Figure 37)

SYMBOL	PARAMETER	MIN	MAX	UNIT
V_{PP}	Programming supply voltage	12.5	13.0	V
I_{PP}	Programming supply current		50	mA
$1/t_{CLCL}$	Oscillator frequency	4	6	MHz
t_{AVGL}	Address setup to $\overline{PROG}$ low	$48t_{CLCL}$		
t_{GHAX}	Address hold after $\overline{PROG}$	$48t_{CLCL}$		
t_{DVGL}	Data setup to $\overline{PROG}$ low	$48t_{CLCL}$		
t_{GHDX}	Data hold after $\overline{PROG}$	$48t_{CLCL}$		
t_{EHSH}	P2.7 ($\overline{ENABLE}$) high to V_{PP}	$48t_{CLCL}$		
t_{SHGL}	V_{PP} setup to $\overline{PROG}$ low	10		µs
t_{GHSL}	V_{PP} hold after $\overline{PROG}$	10		µs
t_{GLGH}	$\overline{PROG}$ width	90	110	µs
t_{AVQV}	Address to data valid		$48t_{CLCL}$	
t_{ELQZ}	$\overline{ENABLE}$ low to data valid		$48t_{CLCL}$	
t_{EHQZ}	Data float after $\overline{ENABLE}$	0	$48t_{CLCL}$	
t_{GHGL}	$\overline{PROG}$ high to $\overline{PROG}$ low	10		µs

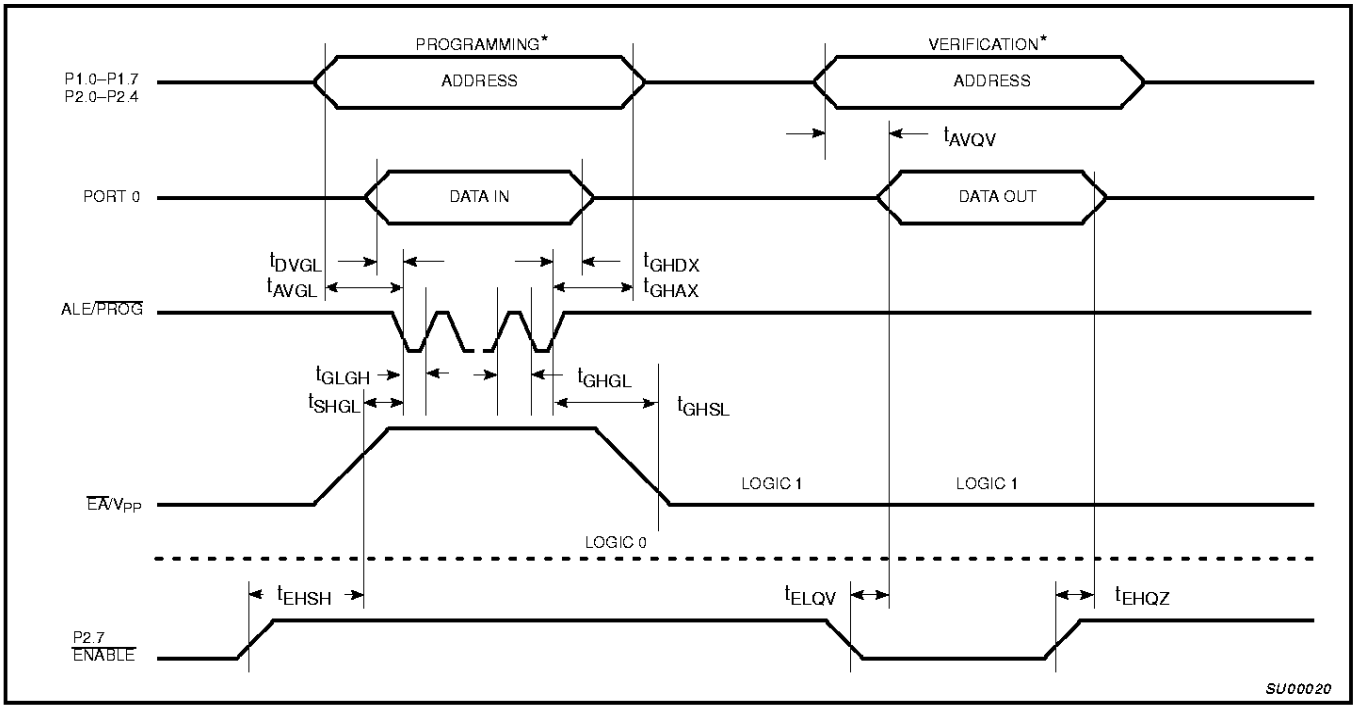

* FOR PROGRAMMING VERIFICATION SEE FIGURE 34.
FOR VERIFICATION CONDITIONS SEE FIGURE 36.

Figure 37. EPROM Programming and Verification

DIP40: plastic dual in-line package; 40 leads (600 mil) **SOT129-1**

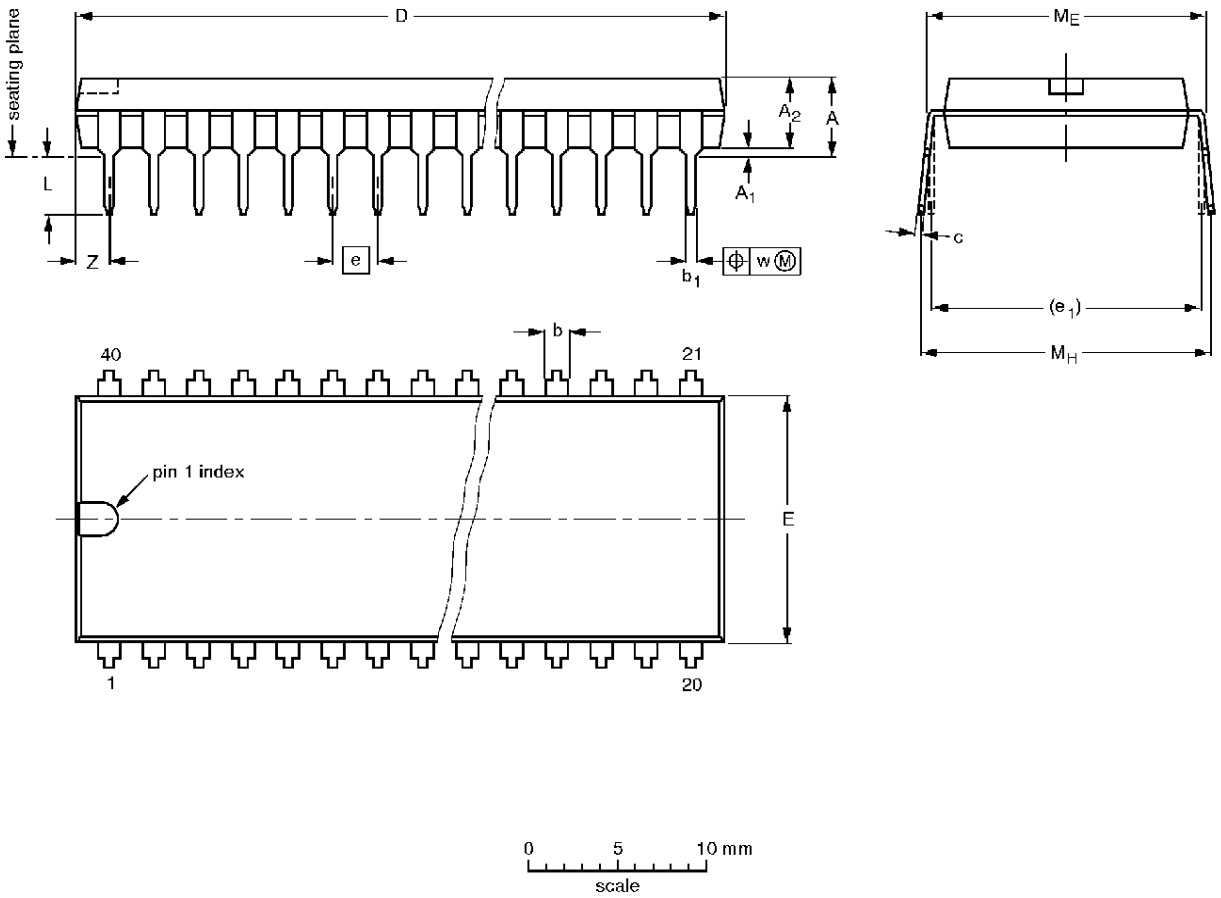

DIMENSIONS (inch dimensions are derived from the original mm dimensions)

UNIT	A max.	A_1 min.	A_2 max.	b	b_1	c	D (1)	E (1)	e	e_1	L	M_E	M_H	w	Z (1) max.
mm	4.7	0.51	4.0	1.70 1.14	0.53 0.38	0.36 0.23	52.50 51.50	14.1 13.7	2.54	15.24	3.60 3.05	15.80 15.24	17.42 15.90	0.254	2.25
inches	0.19	0.020	0.16	0.067 0.045	0.021 0.015	0.014 0.009	2.067 2.028	0.56 0.54	0.10	0.60	0.14 0.12	0.62 0.60	0.69 0.63	0.01	0.089

Note

1. Plastic or metal protrusions of 0.25 mm maximum per side are not included.

OUTLINE VERSION	REFERENCES				EUROPEAN PROJECTION	ISSUE DATE
	IEC	JEDEC	EIAJ			
SOT129-1	051G08	MO-015AJ				~~92-11-17~~ 95-01-14

PLCC44: plastic leaded chip carrier; 44 leads **SOT187-2**

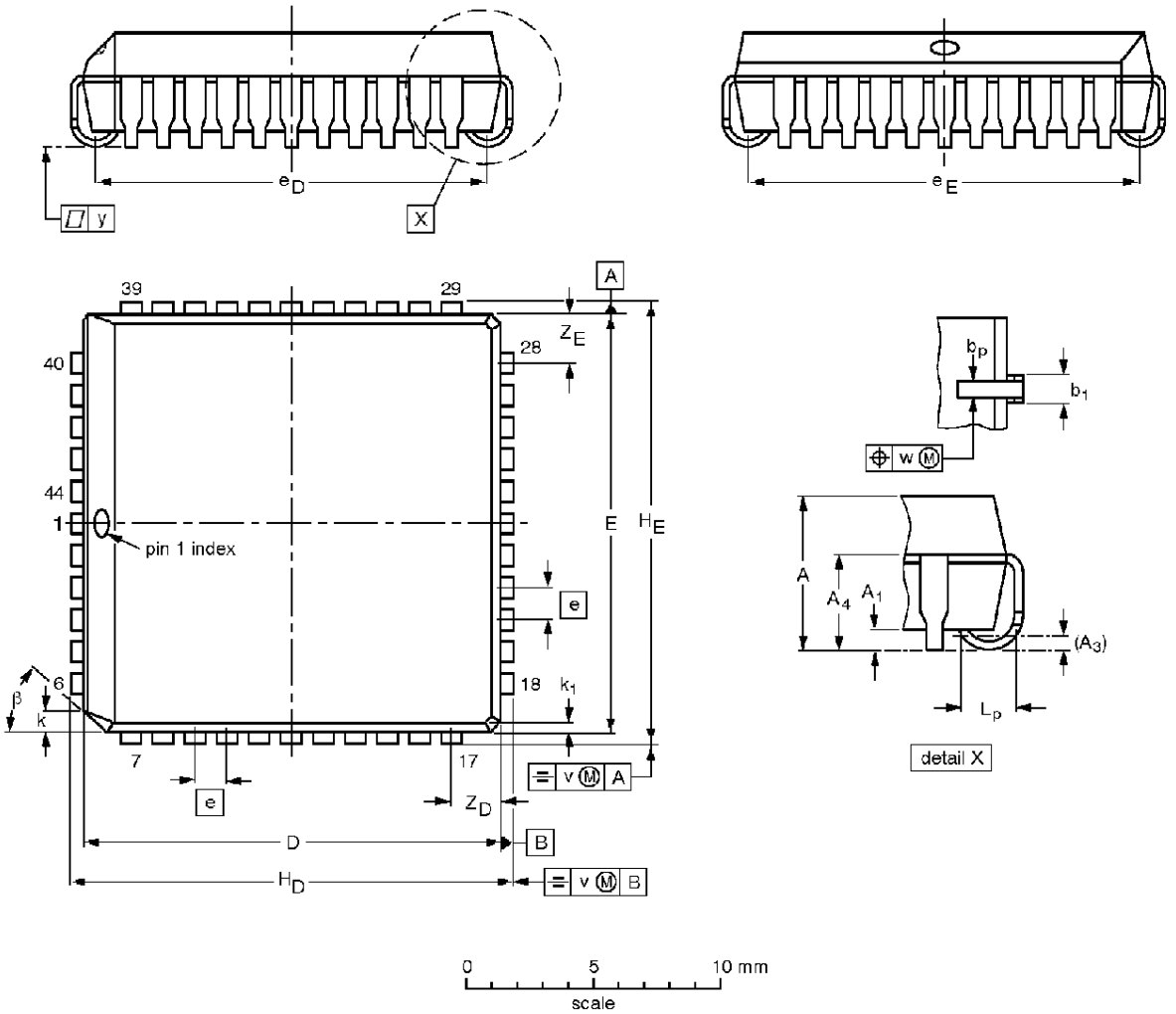

DIMENSIONS (millimetre dimensions are derived from the original inch dimensions)

UNIT	A	A_1 min.	A_3	A_4 max.	b_p	b_1	D(1)	E(1)	e	e_D	e_E	H_D	H_E	k	k_1 max.	L_p	v	w	y	Z_D(1) max.	Z_E(1) max.	β
mm	4.57 4.19	0.51	0.25	3.05	0.53 0.33	0.81 0.66	16.66 16.51	16.66 16.51	1.27	16.00 14.99	16.00 14.99	17.65 17.40	17.65 17.40	1.22 1.07	0.51	1.44 1.02	0.18	0.18	0.10	2.16	2.16	45°
inches	0.180 0.165	0.020	0.01	0.12	0.021 0.013	0.032 0.026	0.656 0.650	0.656 0.650	0.05	0.630 0.590	0.630 0.590	0.695 0.685	0.695 0.685	0.048 0.042	0.020	0.057 0.040	0.007	0.007	0.004	0.085	0.085	

Note

1. Plastic or metal protrusions of 0.01 inches maximum per side are not included.

OUTLINE VERSION	REFERENCES				EUROPEAN PROJECTION	ISSUE DATE
	IEC	JEDEC	EIAJ			
SOT187-2	112E10	MO-047AC				~~92-11-17~~ 95-02-25

0590B 40-PIN (600 mils wide) CERAMIC DUAL IN-LINE (F) PACKAGE (WITH WINDOW (FA) PACKAGE)

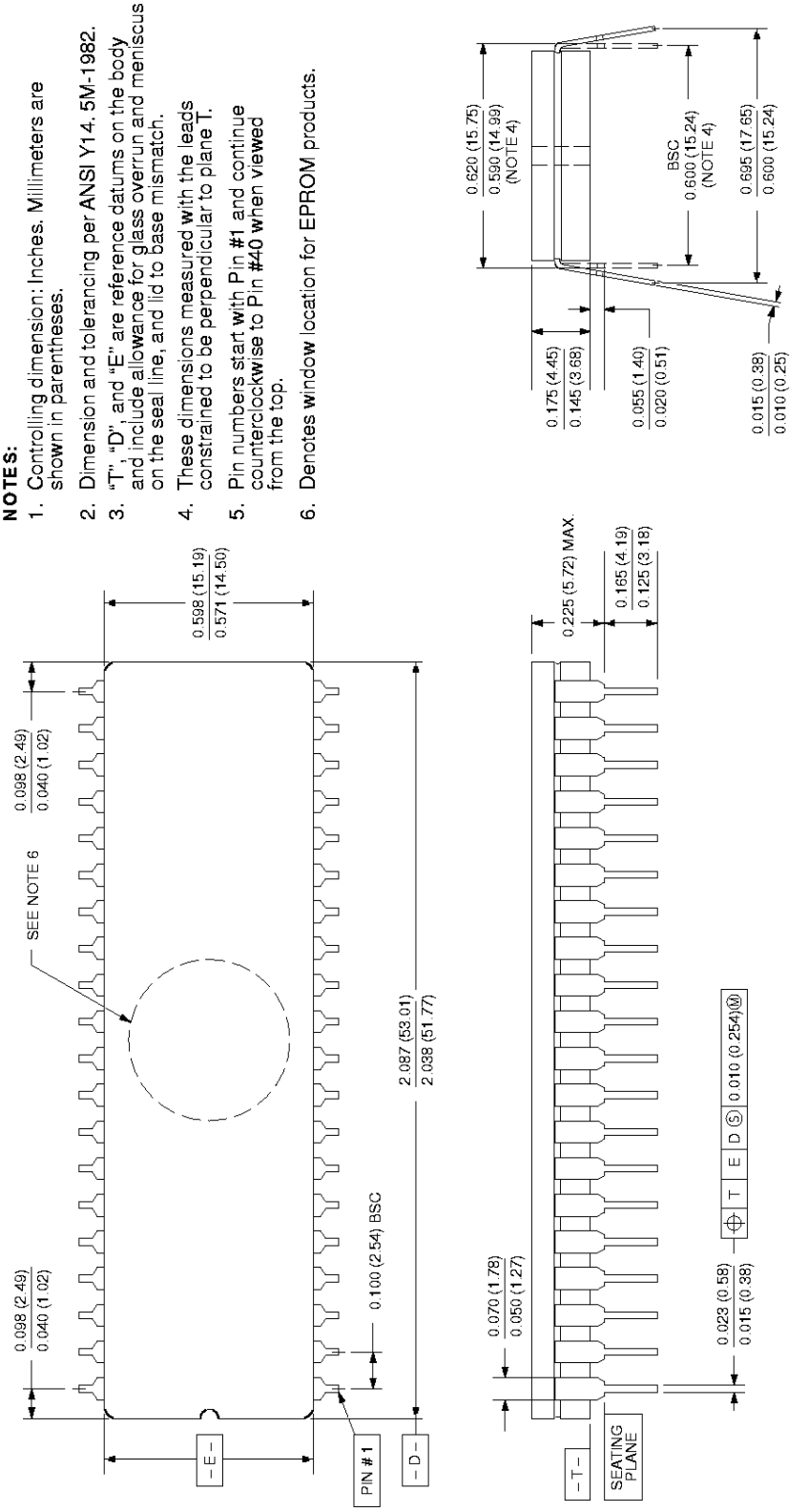

1472A 44-PIN CERQUAD J-BEND (K) PACKAGE

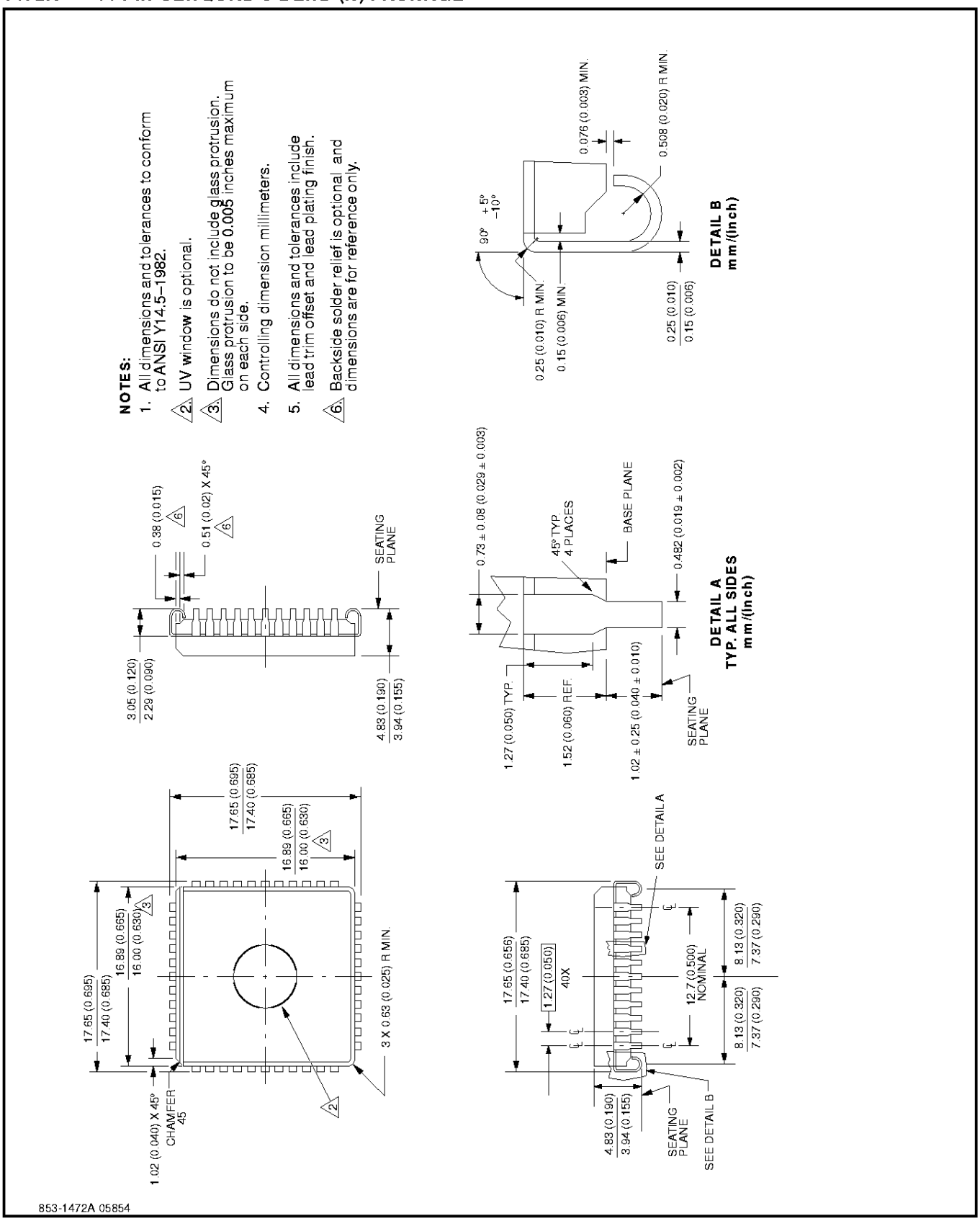

NOTES

DEFINITIONS

Data Sheet Identification	Product Status	Definition
Objective Specification	Formative or in Design	This data sheet contains the design target or goal specifications for product development. Specifications may change in any manner without notice.
Preliminary Specification	Preproduction Product	This data sheet contains preliminary data, and supplementary data will be published at a later date. Philips Semiconductors reserves the right to make changes at any time without notice in order to improve design and supply the best possible product.
Product Specification	Full Production	This data sheet contains Final Specifications. Philips Semiconductors reserves the right to make changes at any time without notice, in order to improve design and supply the best possible product.

Philips Semiconductors and Philips Electronics North America Corporation reserve the right to make changes, without notice, in the products, including circuits, standard cells, and/or software, described or contained herein in order to improve design and/or performance. Philips Semiconductors assumes no responsibility or liability for the use of any of these products, conveys no license or title under any patent, copyright, or mask work right to these products, and makes no representations or warranties that these products are free from patent, copyright, or mask work right infringement, unless otherwise specified. Applications that are described herein for any of these products are for illustrative purposes only. Philips Semiconductors makes no representation or warranty that such applications will be suitable for the specified use without further testing or modification.

LIFE SUPPORT APPLICATIONS
Philips Semiconductors and Philips Electronics North America Corporation Products are not designed for use in life support appliances, devices, or systems where malfunction of a Philips Semiconductors and Philips Electronics North America Corporation Product can reasonably be expected to result in a personal injury. Philips Semiconductors and Philips Electronics North America Corporation customers using or selling Philips Semiconductors and Philips Electronics North America Corporation Products for use in such applications do so at their own risk and agree to fully indemnify Philips Semiconductors and Philips Electronics North America Corporation for any damages resulting from such improper use or sale.

Philips Semiconductors
811 East Arques Avenue
P.O. Box 3409
Sunnyvale, California 94088–3409
Telephone 800-234-7381

Philips Semiconductors and Philips Electronics North America Corporation register eligible circuits under the Semiconductor Chip Protection Act.
© Copyright Philips Electronics North America Corporation 1996
All rights reserved. Printed in U.S.A.

Let's make things better.

Philips Semiconductors

PHILIPS