THIS DRAWING IS UNPUBLISHED. RELEASED FOR PUBLICATION 20
© COPYRIGHT 20 BY - ALL RIGHTS RESERVED.

LOC	DIST
GP	00

REVISIONS

P	LTR	DESCRIPTION	DATE	DWN	APVD
	A2	REVISED PER ECO-11-004835	11MAR2011	RK	HMR
	A3	REVISED PER ECO-14-010818	27OCT2014	RG	SH
	B	REVISED PER ECO-17-017261	02MAY2018	TX	SH
	C1	REVISED PER ECN-21-111504	03AUG2021	TM	DZ

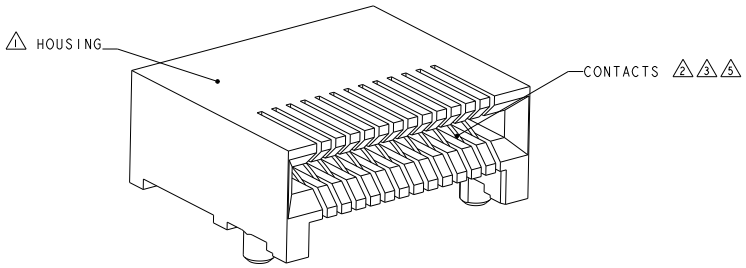

26 POSITION RECEPTACLE
SCALE 9:1

1 MATERIAL: LCP, BLACK.

2 MATERIAL: PHOSPHOR BRONZE PER ASTM B 103.

3 FINISH: 0.76µm MIN GOLD PLATE PER ASTM B 488, APPLIES TO INTERFACE AREA AND 2.03µm MIN TIN PLATE SOLDER TAILS, ALL OVER 3.81µm MIN NICKEL PLATE PER QQ-N-290.

4 DATUM AND BASIC DIMENSION ESTABLISHED BY CUSTOMER.

5 FINISH: 0.38µm MIN GOLD PLATE PER ASTM B 488, APPLIES TO INTERFACE AREA AND 2.03µm MIN TIN PLATE SOLDER TAILS, ALL OVER 3.81µm MIN NICKEL PLATE PER QQ-N-290.

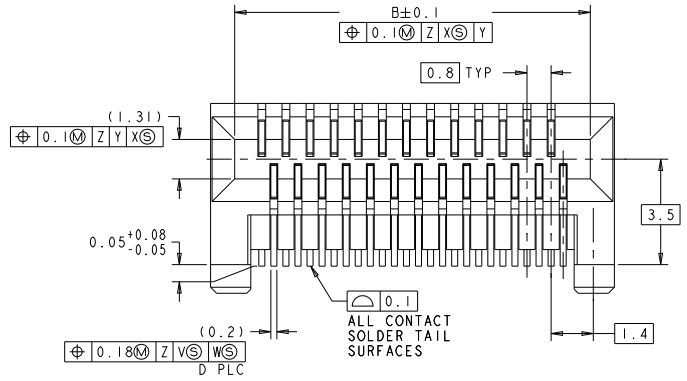

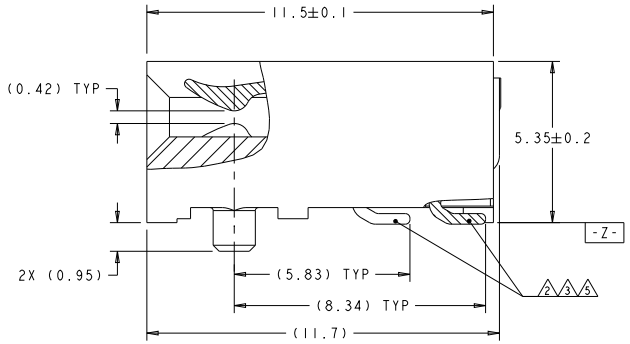

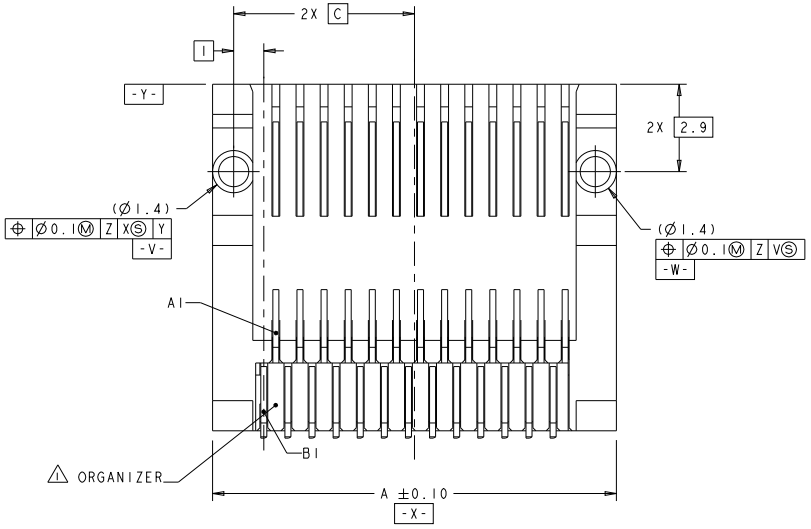

		E	D	C	B	A	POSN	PART NUMBER
5	TAPE AND REEL	16.80	38	8.40	16.60	18.20	38	1-1761987-8
		~~16.00~~	~~36~~	~~8.00~~	~~15.80~~	~~17.40~~	~~36~~	~~1-1761987-7~~
		~~12.00~~	~~26~~	~~6.00~~	~~11.80~~	~~13.40~~	~~26~~	~~1-1761987-6~~
	TUBE	~~28.80~~	~~68~~	~~14.80~~	~~28.60~~	~~30.20~~	~~68~~	~~1-1761987-5~~
		~~16.80~~	~~38~~	~~8.40~~	~~16.60~~	~~18.10~~	~~38~~	~~1-1761987-4~~
		~~23.20~~	~~54~~	~~11.60~~	~~23.00~~	~~24.60~~	~~54~~	~~1-1761987-3~~
		~~21.60~~	~~50~~	~~10.80~~	~~21.40~~	~~23.00~~	~~50~~	~~1-1761987-2~~
		~~16.00~~	~~36~~	~~8.00~~	~~15.80~~	~~17.40~~	~~36~~	~~1-1761987-1~~
		~~12.00~~	~~26~~	~~6.00~~	~~11.80~~	~~13.40~~	~~26~~	~~1-1761987-0~~
3	TAPE AND REEL	16.80	38	8.40	16.60	18.20	38	1761987-9
		16.00	36	8.00	15.80	17.40	36	1761987-8
		12.00	26	6.00	11.80	13.40	26	1761987-7
	TUBE	~~28.80~~	~~68~~	~~14.80~~	~~28.60~~	~~30.20~~	~~68~~	~~1761987-6~~
		16.80	38	8.40	16.60	18.20	38	1761987-5
		~~23.20~~	~~54~~	~~11.60~~	~~23.00~~	~~24.60~~	~~54~~	~~1761987-4~~
		~~21.60~~	~~50~~	~~10.80~~	~~21.40~~	~~23.00~~	~~50~~	~~1761987-3~~
		16.00	36	8.00	15.80	17.40	36	1761987-2
		12.00	26	6.00	11.80	13.40	26	1761987-1
FINISH	PACKAGING							PART NUMBER

THIS DRAWING IS A CONTROLLED DOCUMENT.

DIMENSIONS: mm

TOLERANCES UNLESS OTHERWISE SPECIFIED:
0 PLC ±0.13
1 PLC ±0.13
2 PLC ±0.13
3 PLC ±-
4 PLC ±-
ANGLES ±-

MATERIAL: SEE NOTES
FINISH: SEE TABLE

DWN M.E. COMHEE 28JUN2005
CHK R.R. HENRY 28JUN2005
APVD R.R. HENRY 28JUN2005

PRODUCT SPEC 108-2234
APPLICATION SPEC -
WEIGHT -

TE Connectivity

NAME: EVERCLEAR Mini-SAS RECEPTACLE CONNECTOR ASSEMBLY, RIGHT ANGLE, SURFACE MOUNT

SIZE A1 | CAGE CODE 00779 | DRAWING NO C-1761987 | RESTRICTED TO -

CUSTOMER DRAWING | SCALE 12:1 | SHEET 1 OF 2 | REV C1

4805 (3/11)

THIS DRAWING IS UNPUBLISHED. RELEASED FOR PUBLICATION 20
© COPYRIGHT 20 BY - ALL RIGHTS RESERVED.

LOC	DIST
GP	00

REVISIONS

P	LTR	DESCRIPTION	DATE	DWN	APVD
	-	SEE SHEET 1	-	-	-

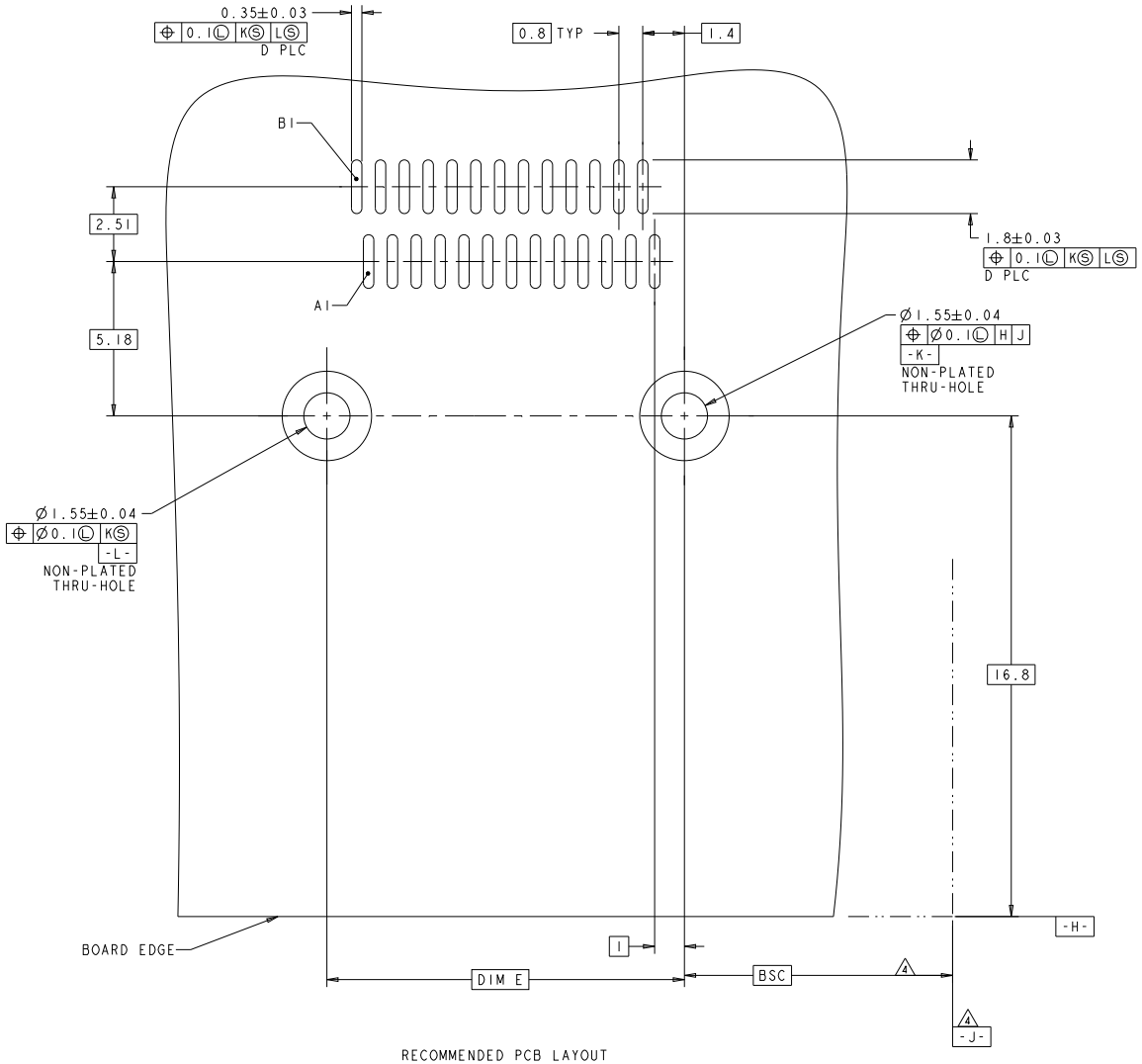

RECOMMENDED PCB LAYOUT

THIS DRAWING IS A CONTROLLED DOCUMENT.	DWN M.E. COWHEG 28JUN2005	TE Connectivity
DIMENSIONS: mm	CHK R.R. HENRY 28JUN2005	NAME EVERCLEAR Mini-SAS RECEPTACLE CONNECTOR ASSEMBLY, RIGHT ANGLE, SURFACE MOUNT
TOLERANCES UNLESS OTHERWISE SPECIFIED: 0 PLC ±0.13; 1 PLC ±0.13; 2 PLC ±0.13; 3 PLC ±-; 4 PLC ±-; ANGLES -° ±-	APVD R.R. HENRY 28JUN2005	
	PRODUCT SPEC 108-2234	
	APPLICATION SPEC -	SIZE A1 · CAGE CODE 00779 · DRAWING NO C-1761987 · RESTRICTED TO -
MATERIAL SEE NOTES	FINISH SEE TABLE	WEIGHT -
		CUSTOMER DRAWING · SCALE 12:1 · SHEET 2 OF 2 · REV C1

4805 (3/11)